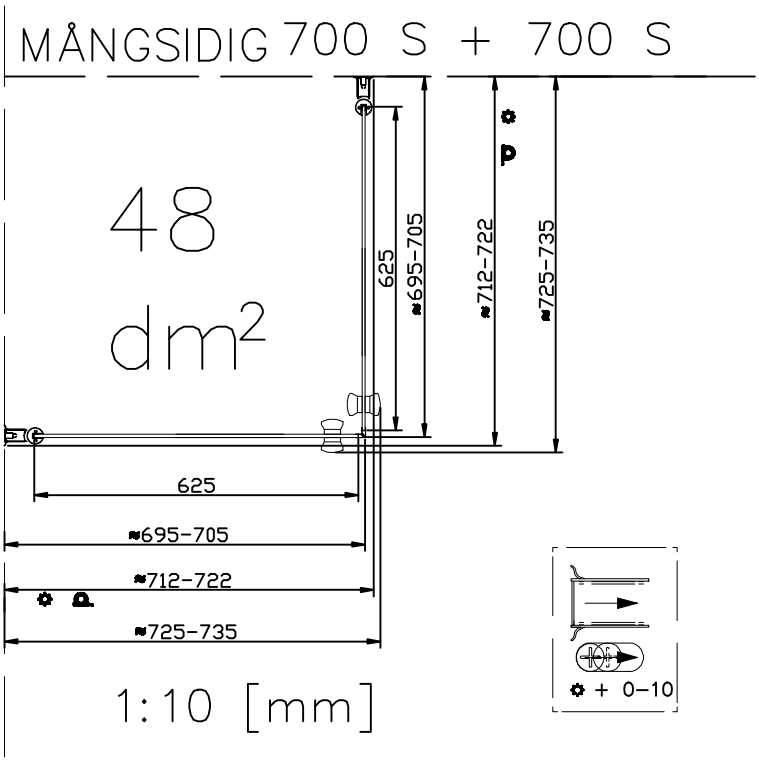

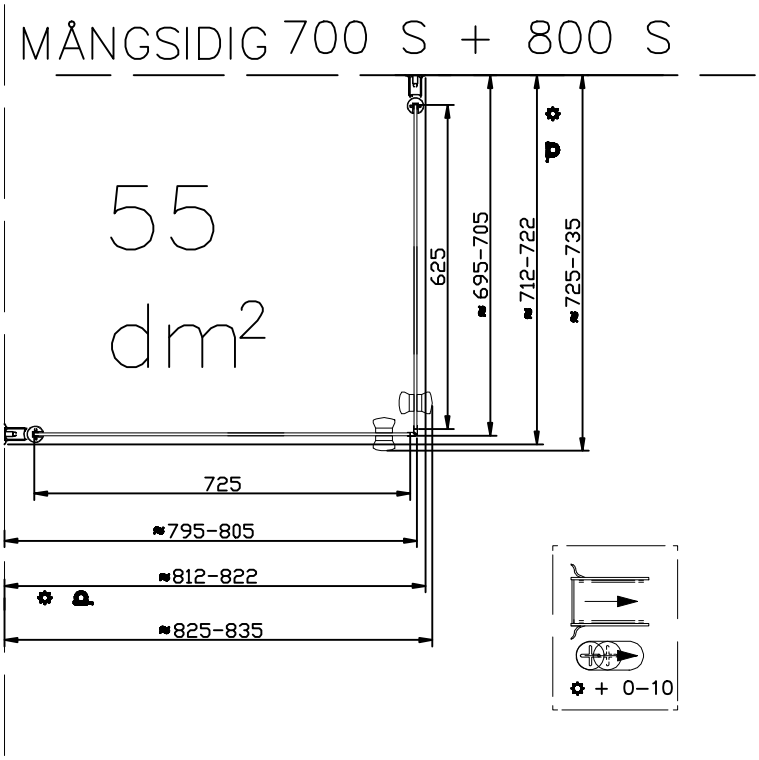

1:10 [mm]

Copyright ©2014 Ikeaframme Design AB. The IKEA FRAME logo is a registered trademark of Ikeaframme Design AB. All rights reserved.

This artwork is presented as is, is a work in progress concept and does not represent the quality or function of a final product.

Some colours are based on the PANTONE® Colour Matching System. Colours may display differently in digital and final products.

MÅNGSIDIG 700 S + 900 S

61 dm²

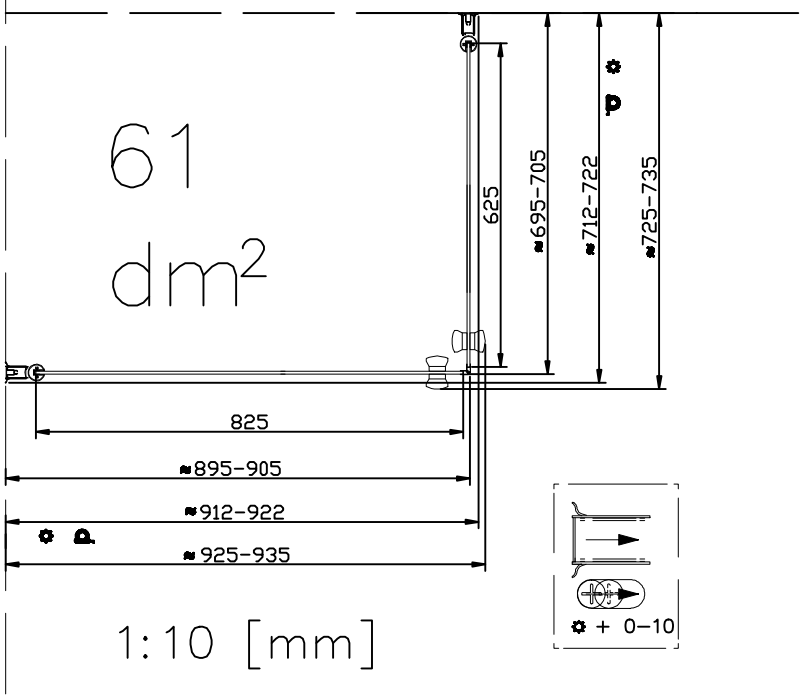

1:10 [mm]

MÅNGSIDIG 700 S + 1000 S

68 dm²

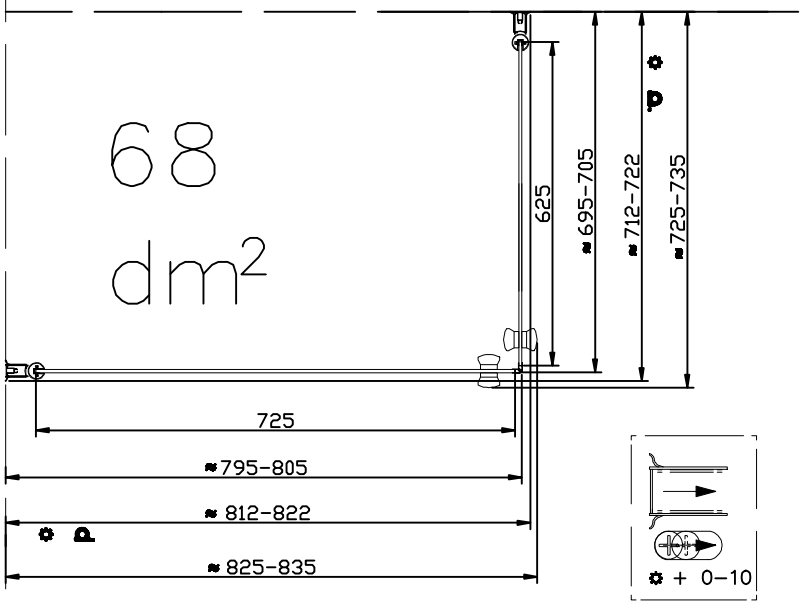

1:10 [mm]

Copyright ©2014 Ragnarsons Design AB. The RAGNARSON logo is a registered trademark of Ragnarsons Design AB. All rights reserved.

This artwork is presented as is, is a sketch to support concept and does not represent the quality or function of a final product.

Some colours are based on the PANTONE® Colour Matching System. Colours may display differently in digital and final products.

MÅNGSIDIG 800 S + 800 S

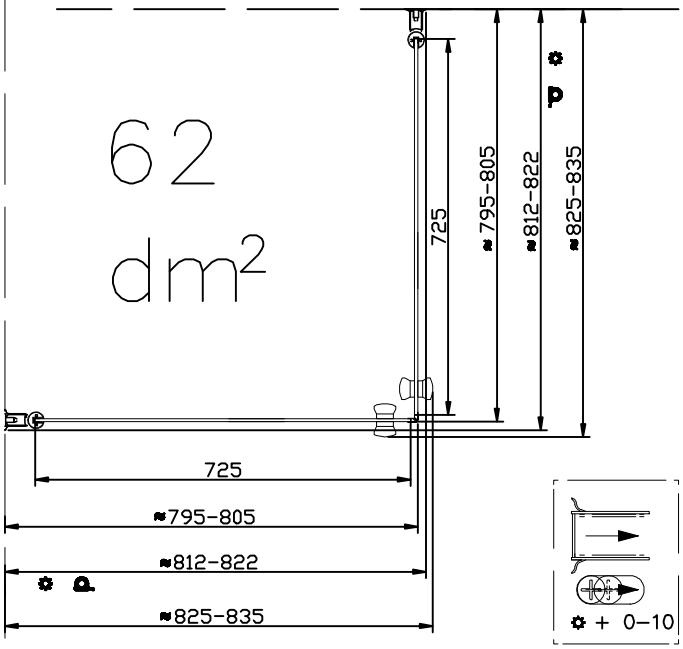

1:10 [mm]

MÅNGSIDIG 800 S + 900 S

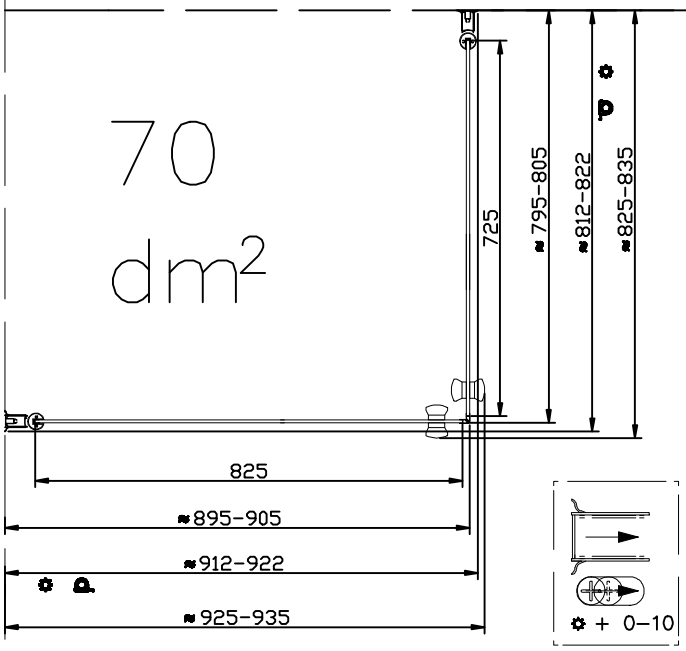

1:10 [mm]

Copyright ©2010 Göteborgs Design AB. The GÖTEBORG logo is a registered trademark of Göteborgs Design AB. All rights reserved.
This artwork is presented as is, is to scale in proportion and weight and does not represent the quality or function of a final product.
Some colours are based on the PANTONE® Colour Matching System. Colours may display differently in digital and final products.

MÅNGSIDIG 800 S + 1000 S

78 dm²

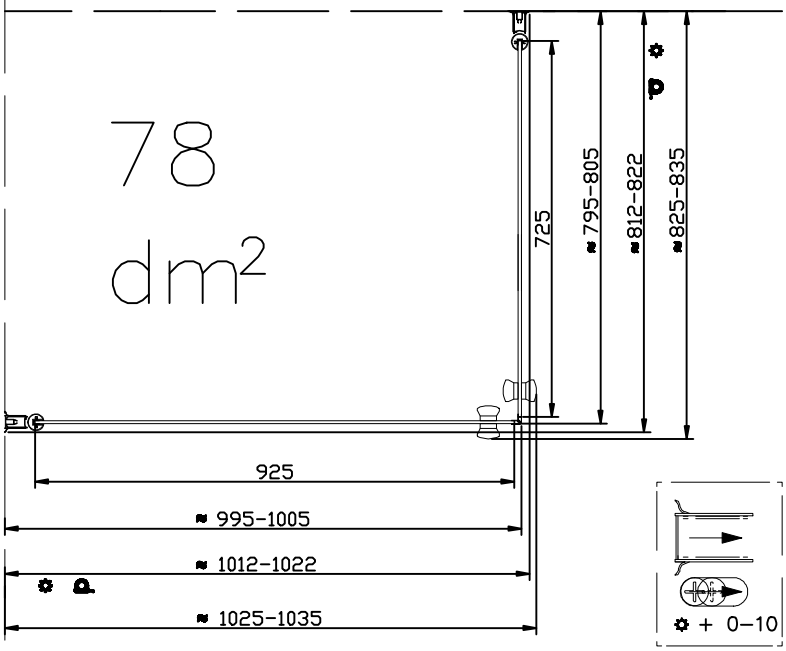

1:10 [mm]

MÅNGSIDIG 900 S + 900 S

79 dm²

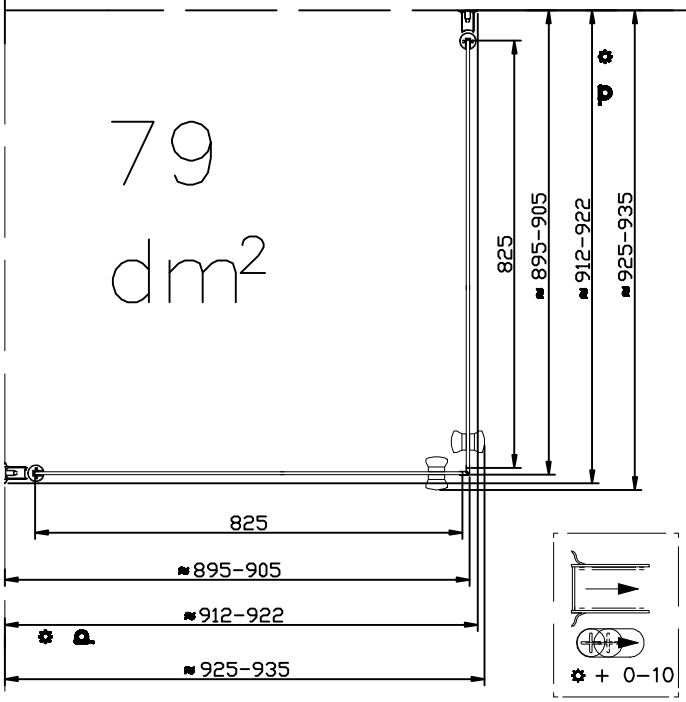

1:10 [mm]

Copyright ©2014 Ikeagruppen Design AB. The IKEA logo is a registered trademark of Ikeagruppen Design AB. All rights reserved.

The artwork is presented as is, in a way it is proper correct and observed represent the quality or function of a final product.

Some colours are based on the PANTONE® Colour Matching System. Colours may display differently in digital and final products.

MÅNGSIDIG 900 S + 1000 S

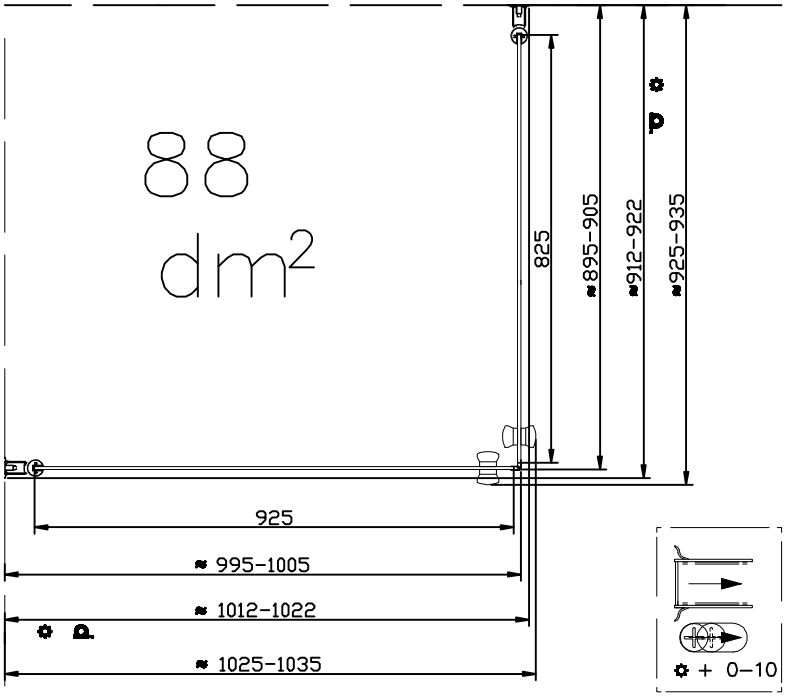

1:10 [mm]

MÅNGSIDIG 1000 S + 1000 S

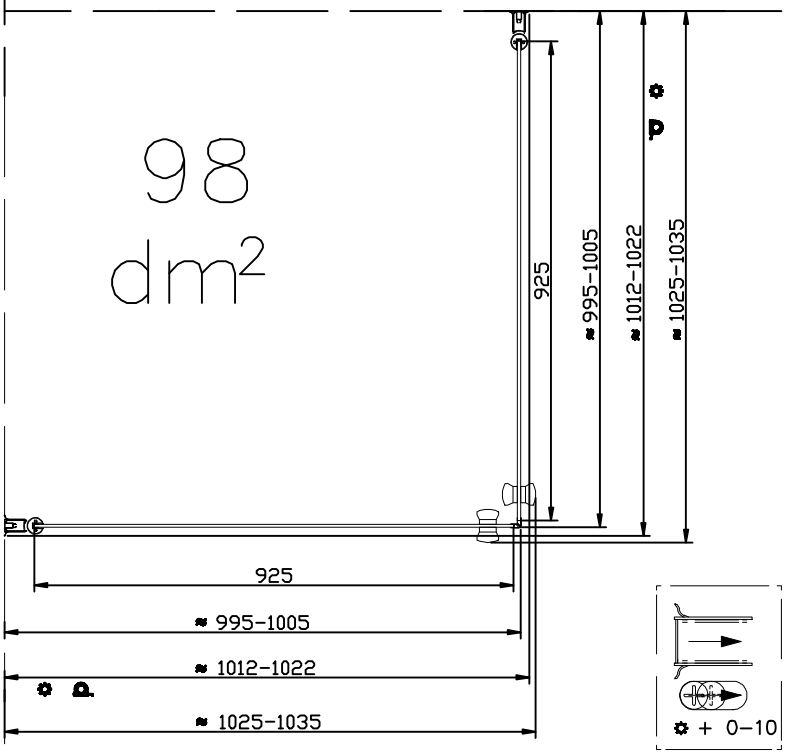

1:10 [mm]

Copyright ©2014 Ergoborre Design AB. The ERGOBORRE logo is a registered trademark of Ergoborre Design AB. All rights reserved.

This artwork is presented as is, it is used in progress and may not always not represent the quality or function of a final product.

Some colours are based on the PANTONE® Colour Matching System. Colours may display differently in digital and final products.

MÅNGSIDIG 700 S + 700 P

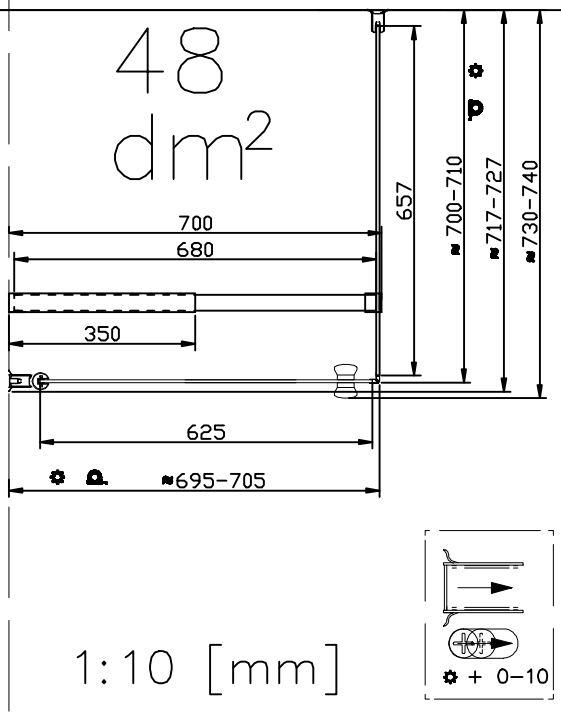

MÅNGSIDIG 700 S + 800 P

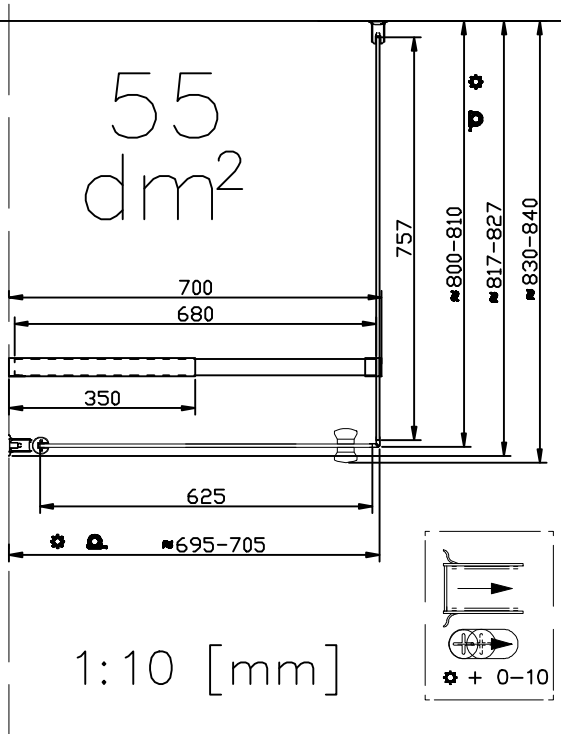

Copyright ©2014 Ruggtorsmo Design AB. The IKEA logo is a registered trademark of Ruggtorsmo Design AB. All rights reserved.

This artwork is presented as is, is a work in progress concept and does not represent the quality or function of a final product.

Some colours are based on the PANTONE® Colour Matching System. Colours may display differently in digital and final product.

MÅNGSIDIG 800 S + 700 P

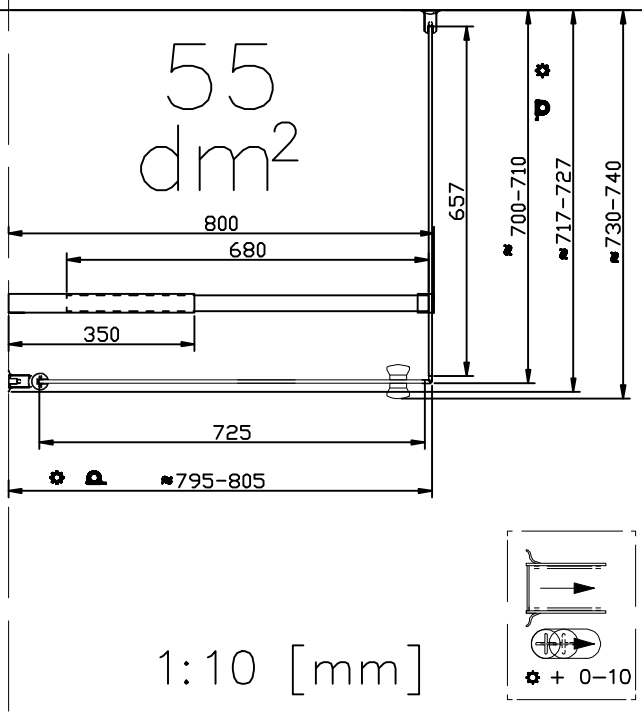

MÅNGSIDIG 800 S + 800 P

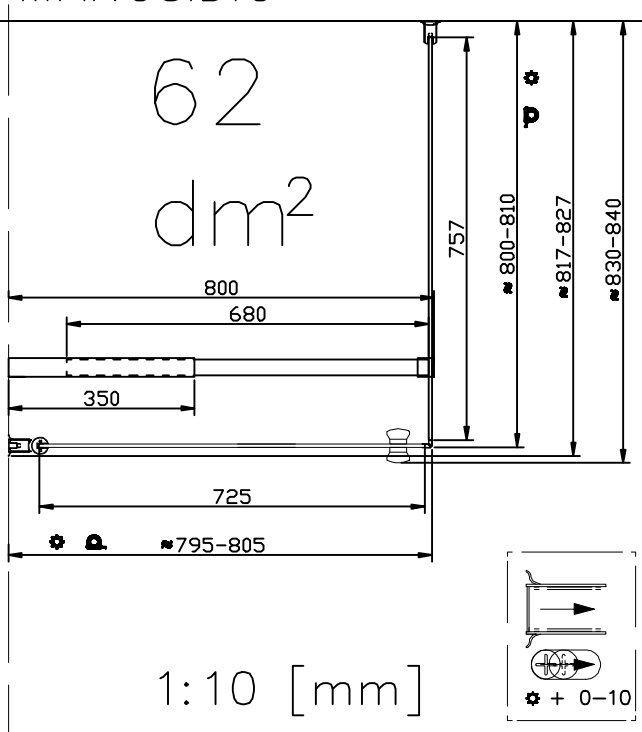

Copyright ©2016 Ryggsanna Design AB. The IKEA DIN logo is a registered trademark of Ryggsanna Design AB. All rights reserved.

This artwork is presented as-is, is a work in progress concept and does not represent the quality or function of a final product.

Some colours are based on the PANTONE® Colour Matching System. Colours may display differently in digital and final products.

MÅNGSIDIG 900 S + 700 P

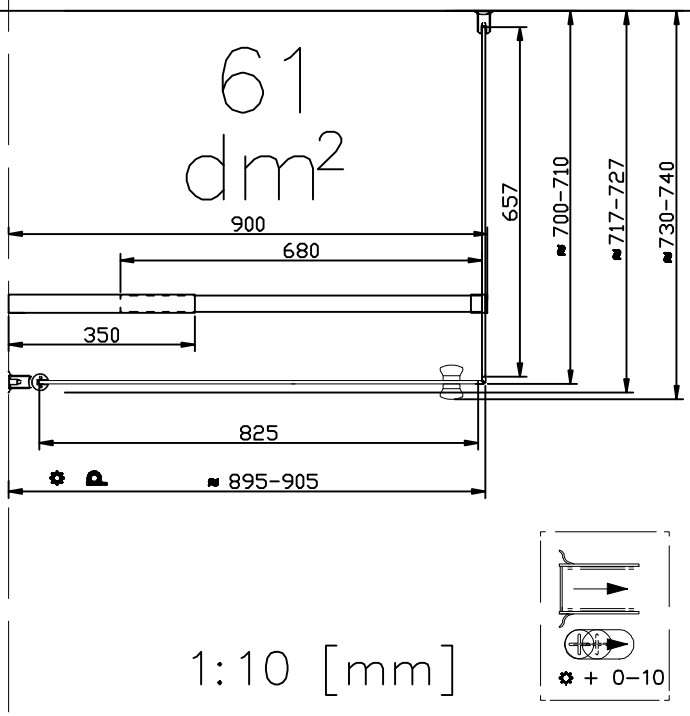

MÅNGSIDIG 900 S + 800 P

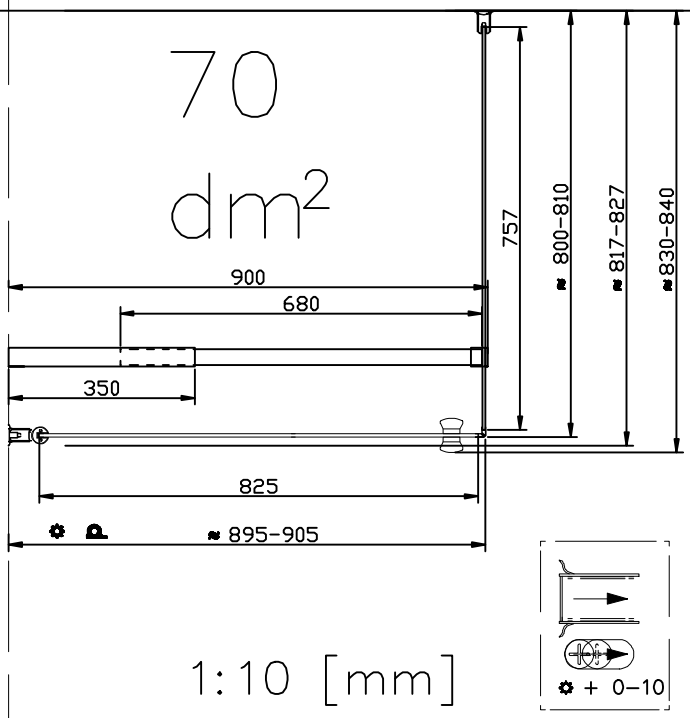

Copyright ©2004 Ikeagruppen Design AB. The IKEA/IKEA logo is a registered trademark of Ikeagruppen Design AB. All rights reserved.

This artwork is presented due to, in a work in progress prompt and does not represent the quality or function of a final product.

Some colours are based on the PANTONE® Colour Matching System. Colours may display differently in digital and final products.

MÅNGSIDIG 1000 S + 700 P

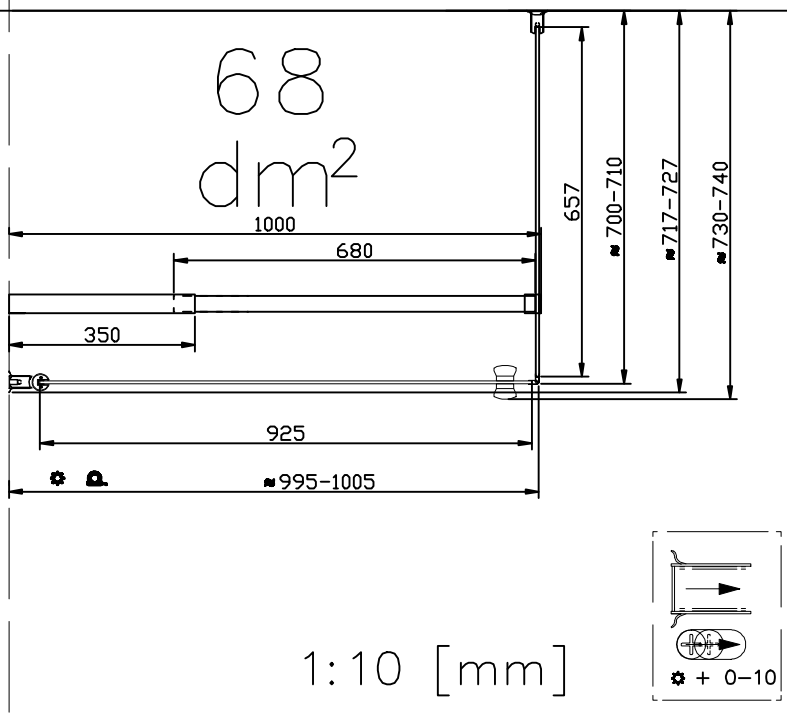

MÅNGSIDIG 1000 S + 800 P

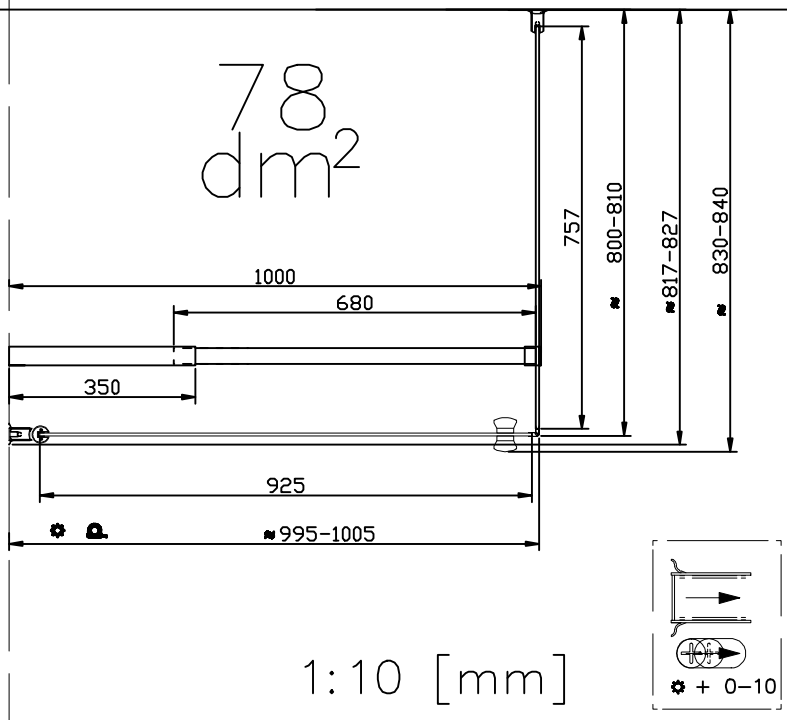

Copyright ©2014 Ryggåsanna Design AB. The IKEA FAMILY logo is a registered trademark of Ryggåsanna Design AB. All rights reserved.

This artwork is presented as is, be a work in progress concept and does not represent the quality or function of a final product.

Some colours are based on the PANTONE® Colour Matching System. Colours may display differently in digital and final products.

MÅNGSIDIG 700 S + 900 P

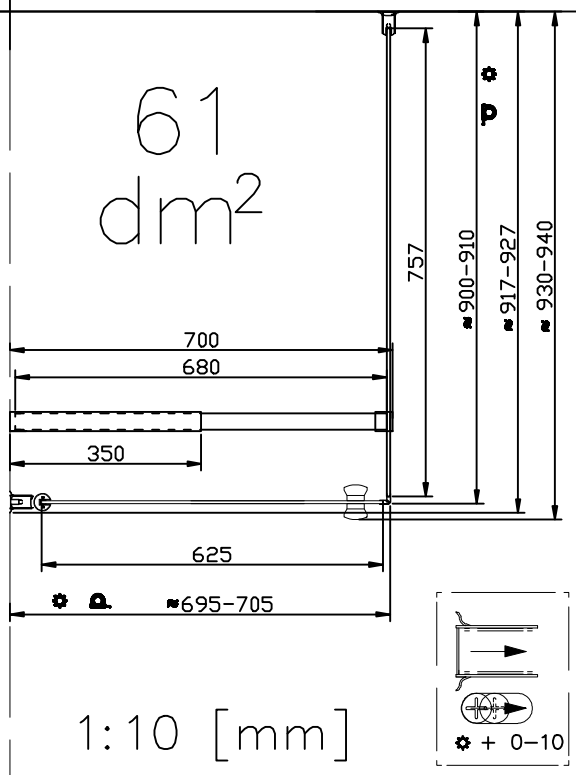

MÅNGSIDIG 700 S + 1000 P

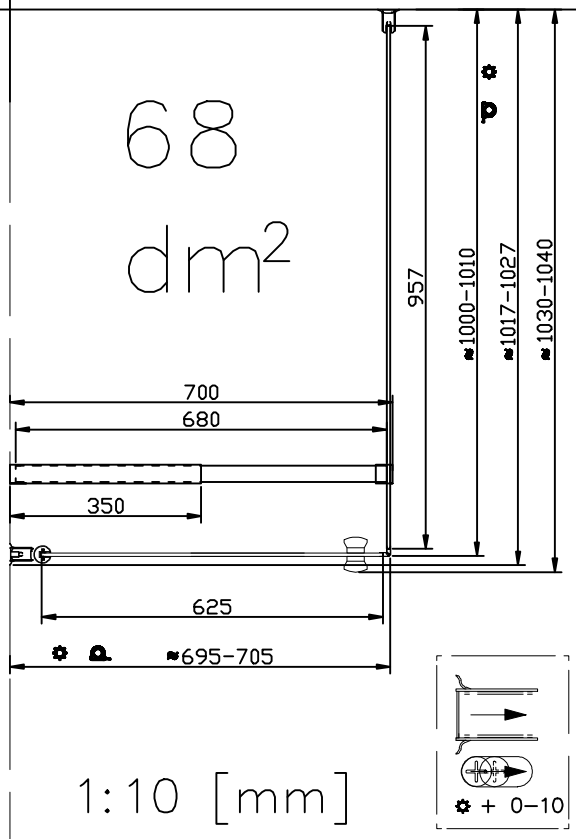

Copyright ©2014 Ikeagruppen Design AB. The IKEA/IKEA logo is a registered trademark of Ikeagruppen Design AB. All rights reserved.

This artwork is presented as is, is to serve as progress concept and does not represent the quality or function of a final product.

Some colours are based on the PANTONE® Colour Matching System. Colours may display differently in digital and final products.

MÅNGSIDIG 800 S + 900 P

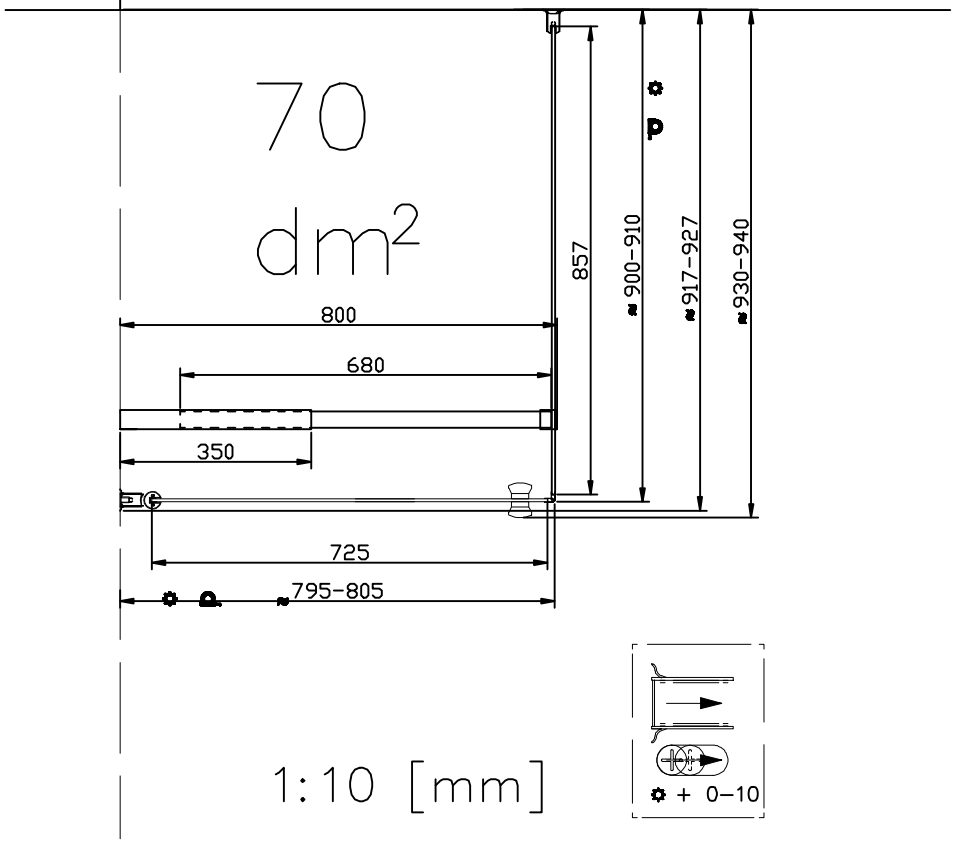

MÅNGSIDIG 800 S + 1000 P

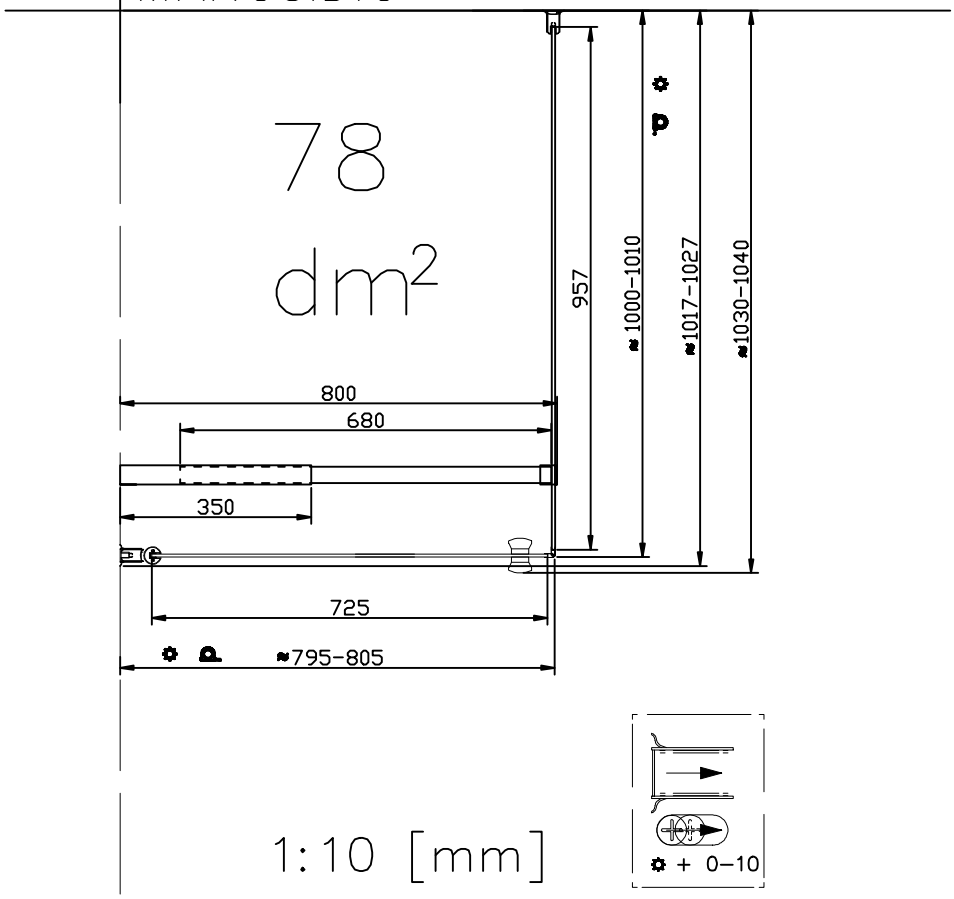

Copyright ©2016 Ikeafamma Sverige AB. The IKEA FAMILY logo is a registered trademark of Ikeafamma Sverige AB. All rights reserved.

This artwork is presented as is, is a work in progress concept and does not represent the quality or function of a final product.

Some colours are based on the PANTONE® Colour Matching System. Colours may display differently in digital and final products.

MÅNGSIDIG 900 S + 900 P

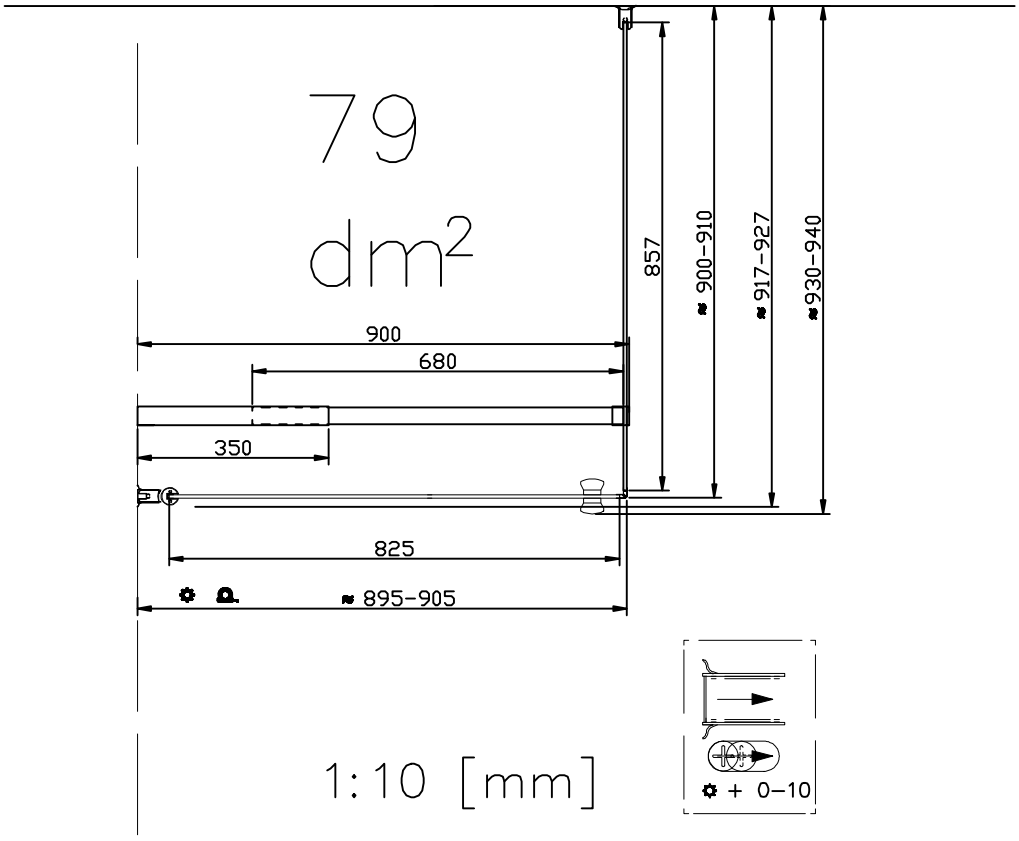

MÅNGSIDIG 900 S + 1000 P

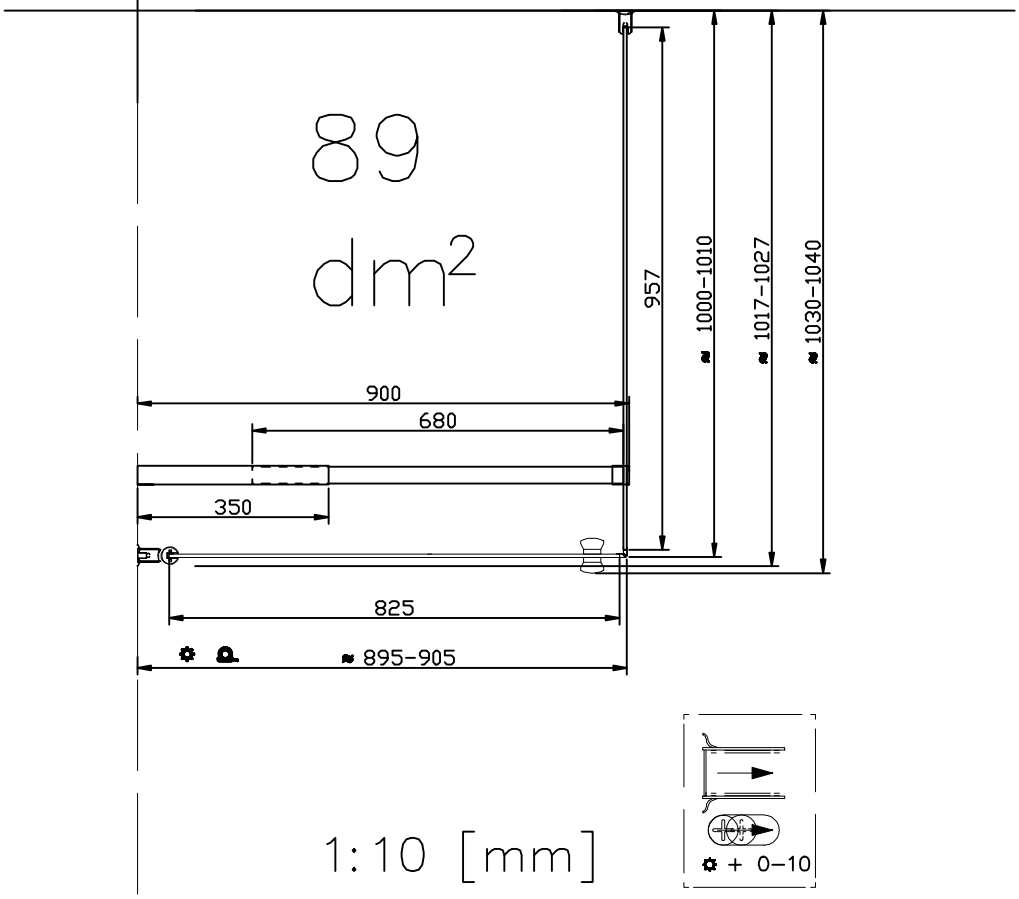

Copyright ©2014 Ragnarsons Design AB. The RAGNARSON logo is a registered trademark of Ragnarsons Design AB. All rights reserved.

This artwork is presented as is, it is a work in progress concept and does not represent the quality or function of a final product.

Some colours are based on the PANTONE® Colour Matching System. Colours may display differently in digital and final products.

MÅNGSIDIG 1000 S + 900 P

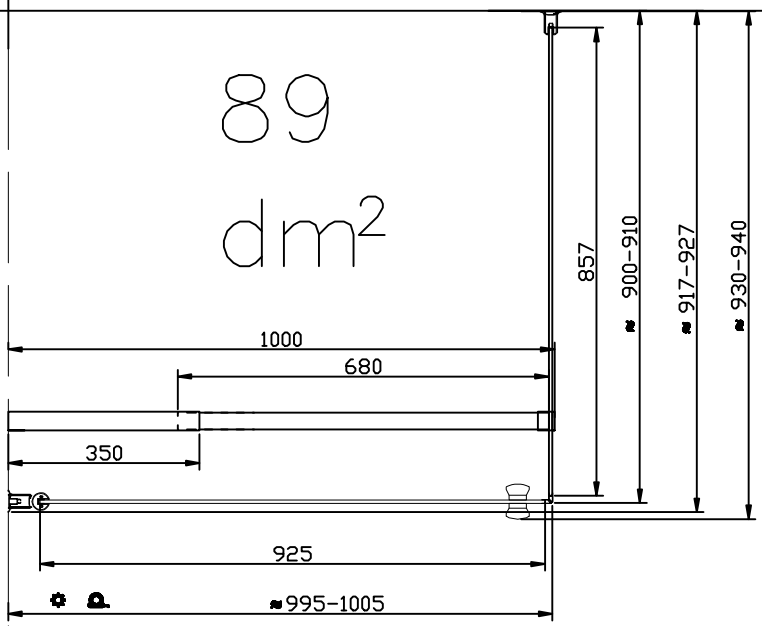

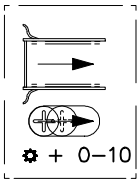

1:10 [mm]

MÅNGSIDIG 1000 S + 1000 P

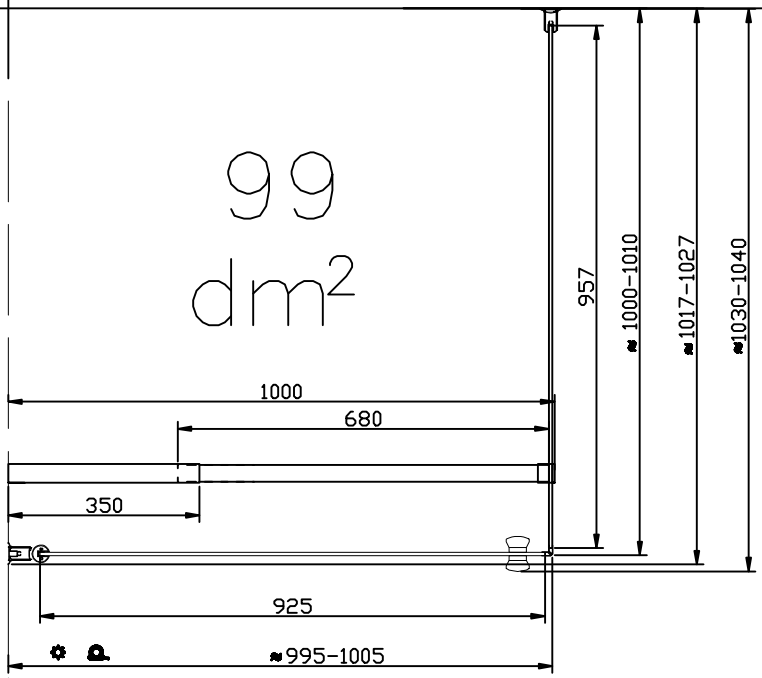

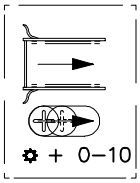

1:10 [mm]

Copyright ©2014 Ruggkonsma Sverige AB. The IKEA logo is a registered trademark of Ruggkonsma Sverige AB. All rights reserved.

This artwork is presented as is, is a work in progress concept and does not represent the quality or function of a final product.

Some colours are based on the PANTONE® Colour Matching System. Colours may display differently in digital and final products.

MÅNGSIDIG 700 H + 700H

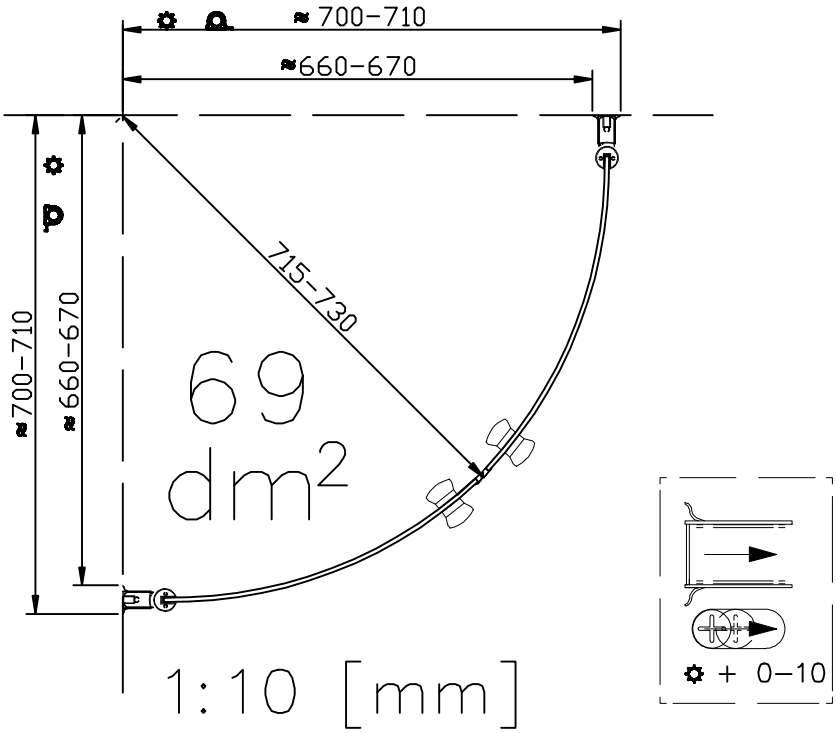

MÅNGSIDIG 800 H + 800H

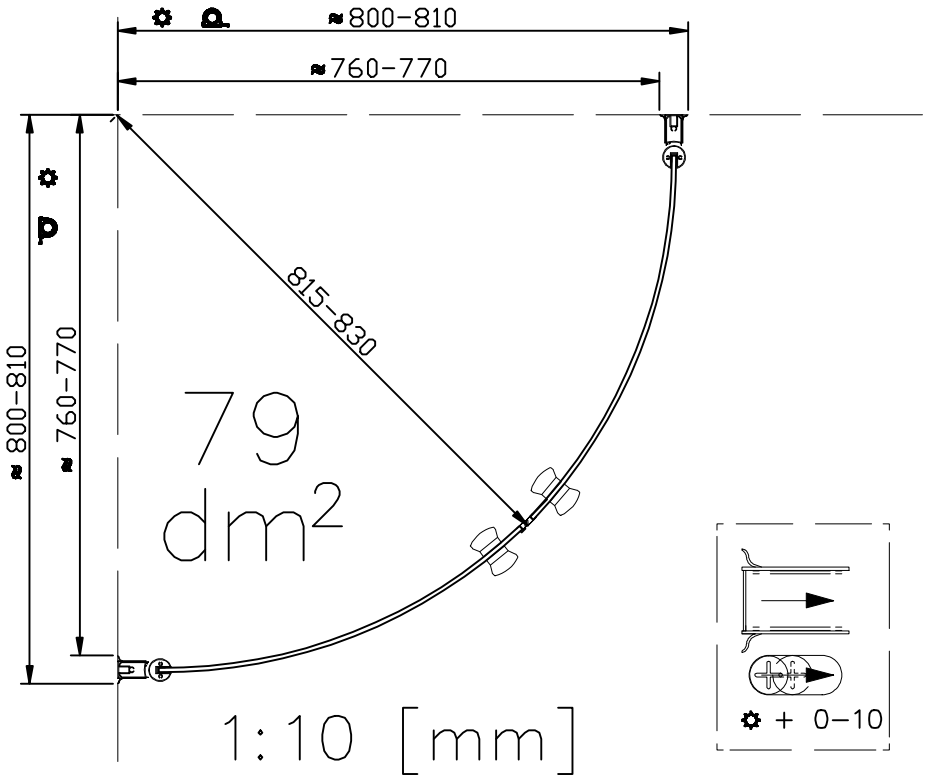

Copyright ©2016 Bygghemma Sverige AB. The bathlife® logo is a registered trademark of Bygghemma Sverige AB. All rights reserved.

This artwork is presented as-is, is a work in progress concept and does not represent the quality or function of a final product.

Some colours are based on the PANTONE® Colour Matching System. Colours may display differently in digital and final products.

MÅNGSIDIG 700 H + 800H

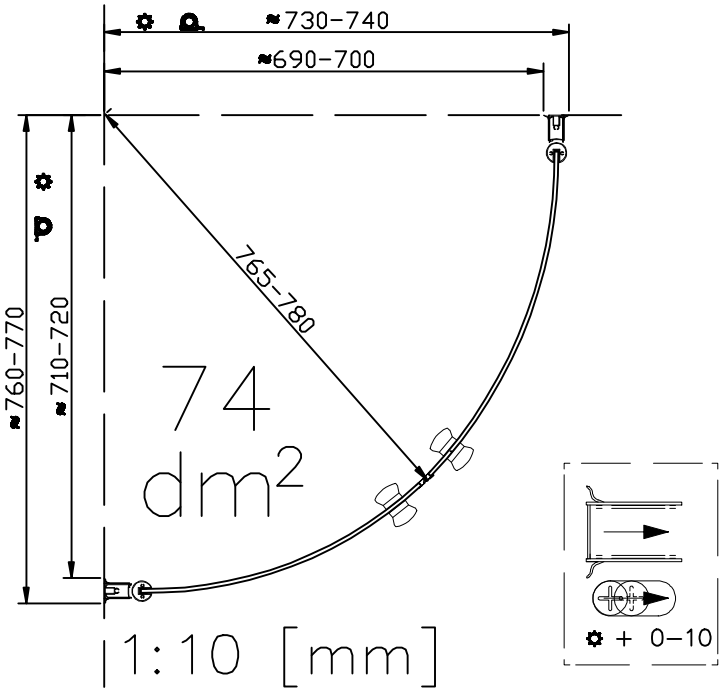

MÅNGSIDIG 800 H + 900H

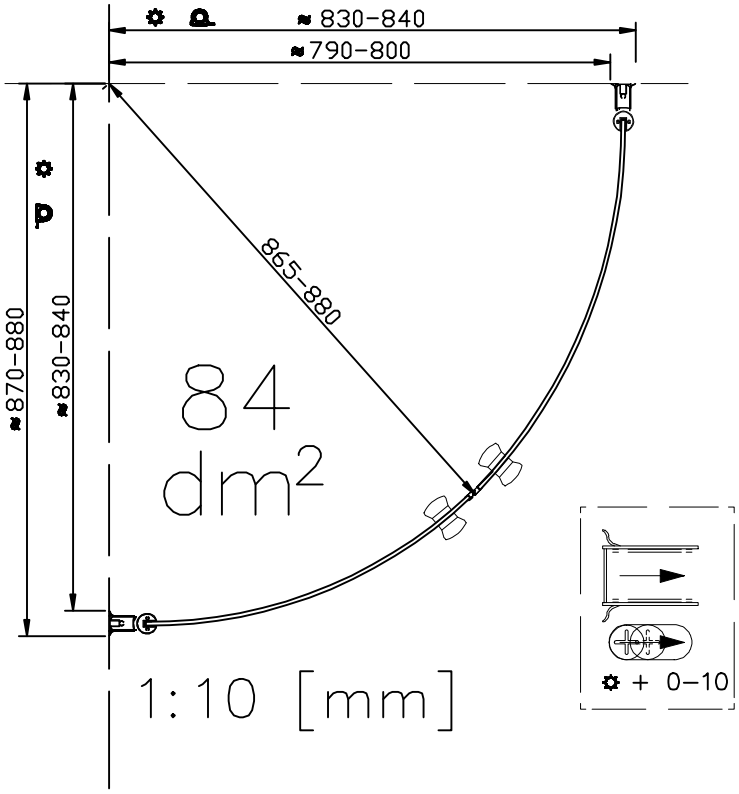

Copyright ©2014 Bygghemma Sverige AB. The bathWOOD logo is a registered trademark of Bygghemma Sverige AB. All rights reserved.

This artwork is presented as-is, is a work in progress concept and does not represent the quality or function of a final product.

Some colours are based on the PANTONE® Colour Matching System. Colours may display differently in digital and final products.

MÅNGSIDIG 700 H + 900H

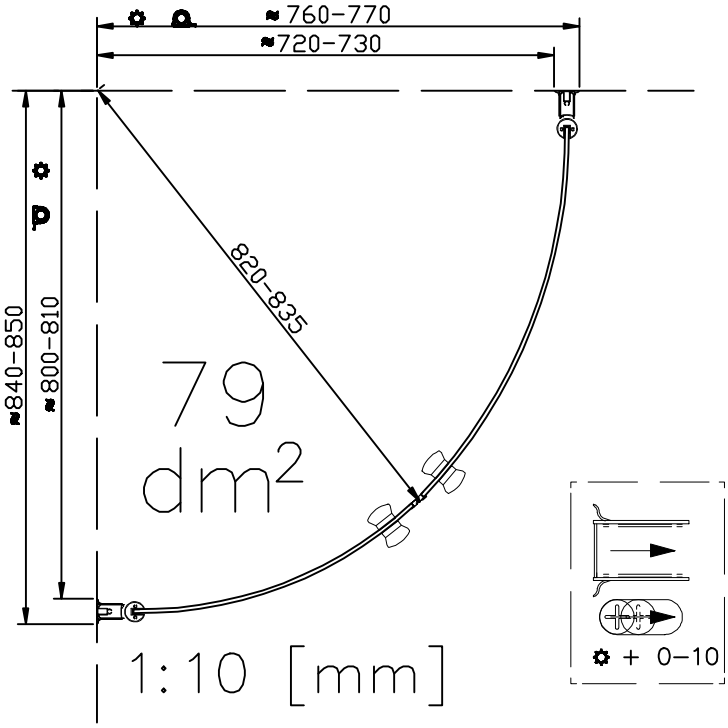

MÅNGSIDIG 800 H + 1000H

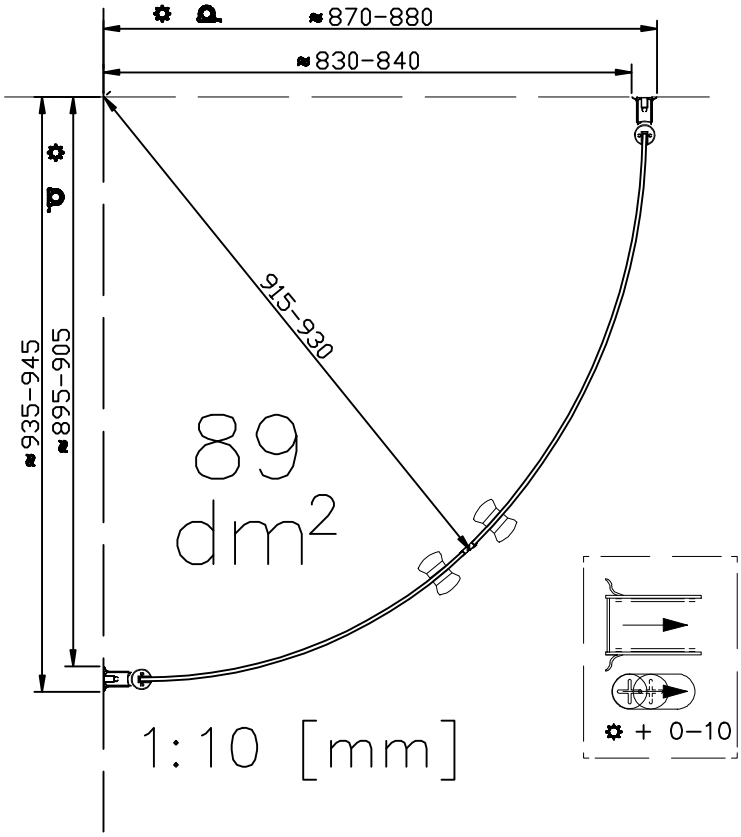

Copyright ©2016 Bygghemma Sverige AB. The LuxMax® logo is a registered trademark of Bygghemma Sverige AB. All rights reserved.

This artwork is presented as-is, is a work in progress concept and does not represent the quality or function of a final product.

Some colours are based on the PANTONE® Colour Matching System. Colours may display differently in digital and final products.

MÅNGSIDIG 900 H + 900H

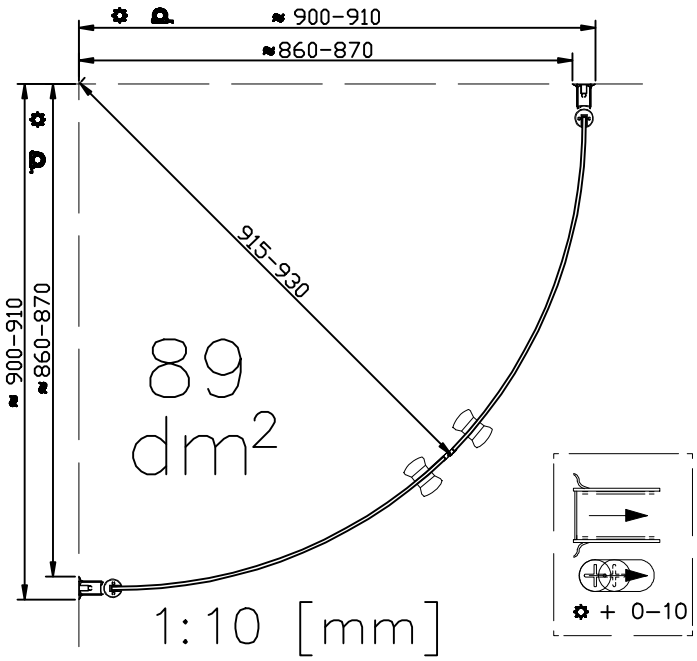

MÅNGSIDIG 1000 H + 1000H

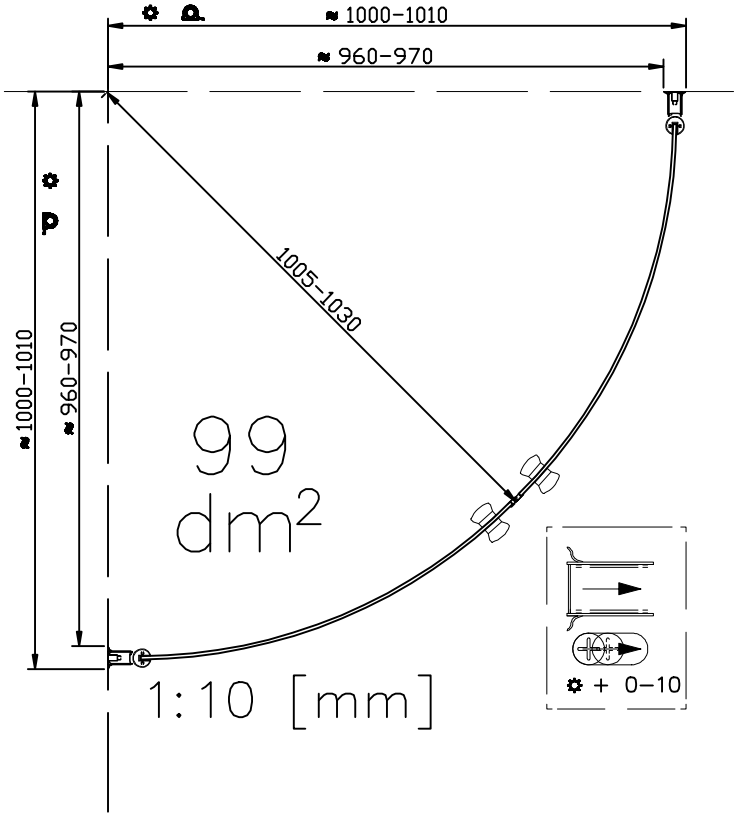

Copyright ©2014 Bygglemma Design AB. The bygglemma logo is a registered trademark of Bygglemma Design AB. All rights reserved.

This artwork is presented as is, is a work in progress concept and does not represent the quality or function of a final product.

Some colours are based on the PANTONE® Colour Matching System. Colours may display differently in digital and final products.

MÅNGSIDIG 900 H + 1000H

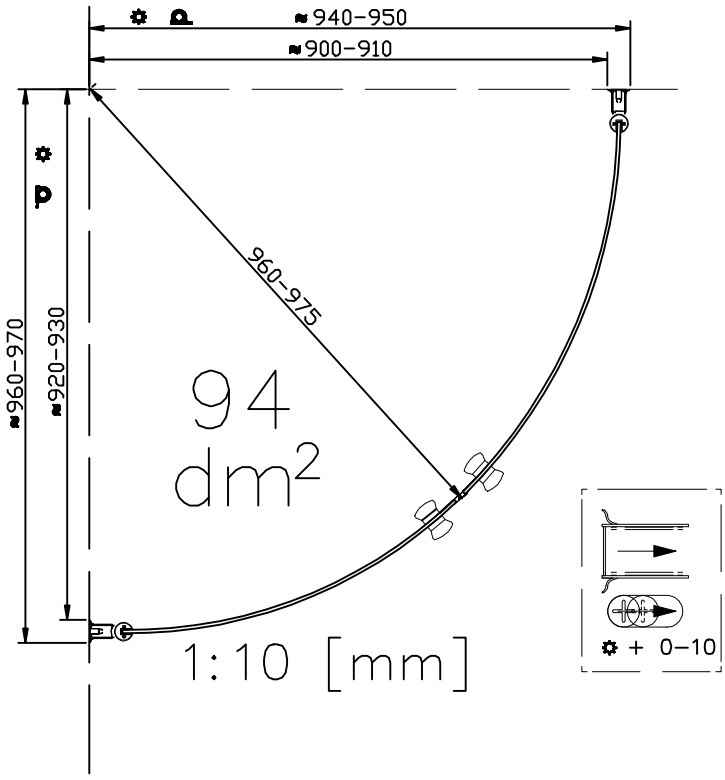

MÅNGSIDIG 700 H + 1000H

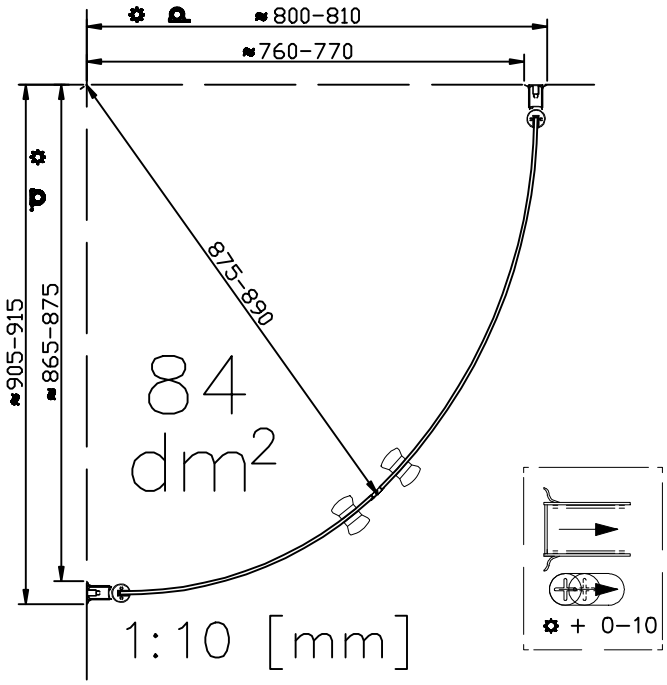

Copyright ©2014 Byggmanna Sverige AB. The bathlab® logo is a registered trademark of Byggmanna Sverige AB. All rights reserved.

This artwork is presented as-is, in a work in progress concept and does not represent the quality or function of a final product.

Some colours are based on the PANTONE® Colour Matching System. Colours may display differently in digital and final products.