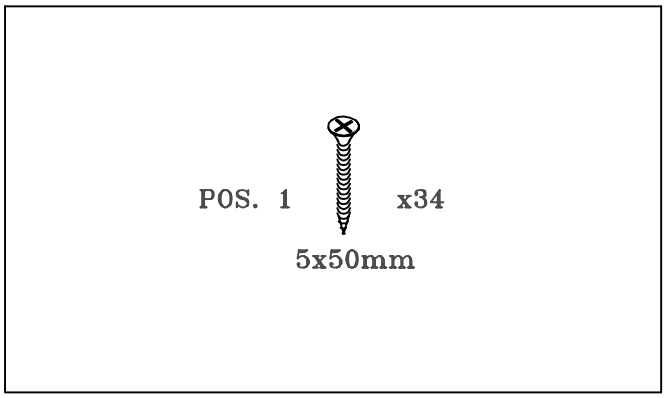
POS. 1
x34
5x50mm

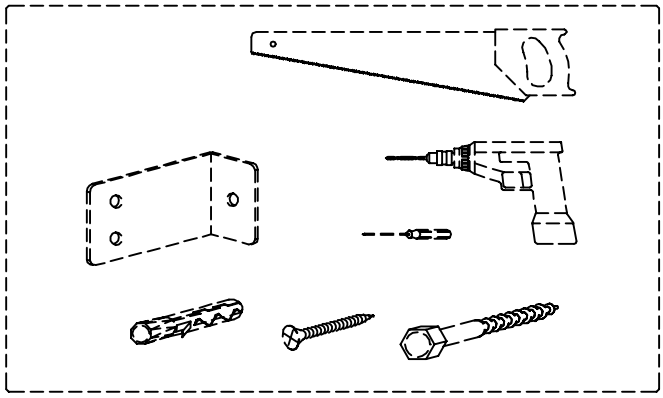

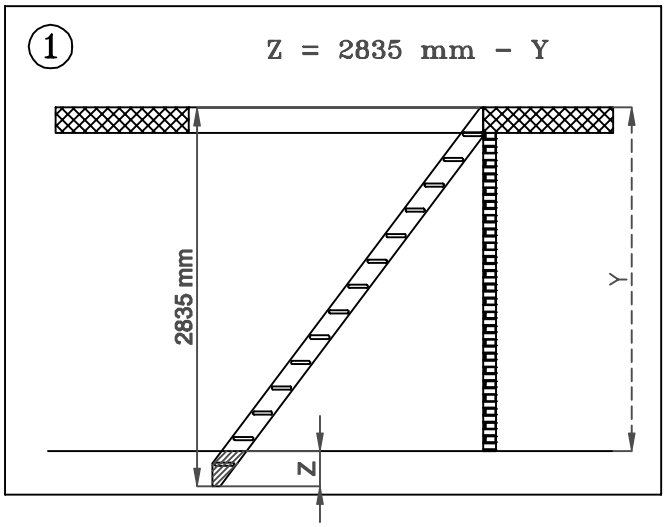
1
Z = 2835 mm - Y
2835 mm
Y
Z

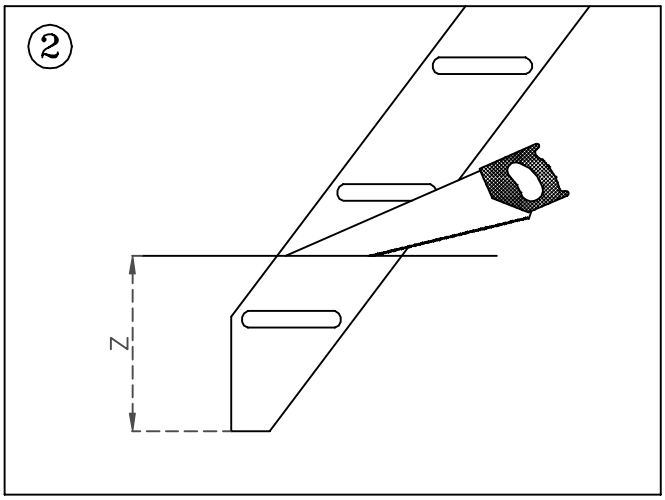
2
Z

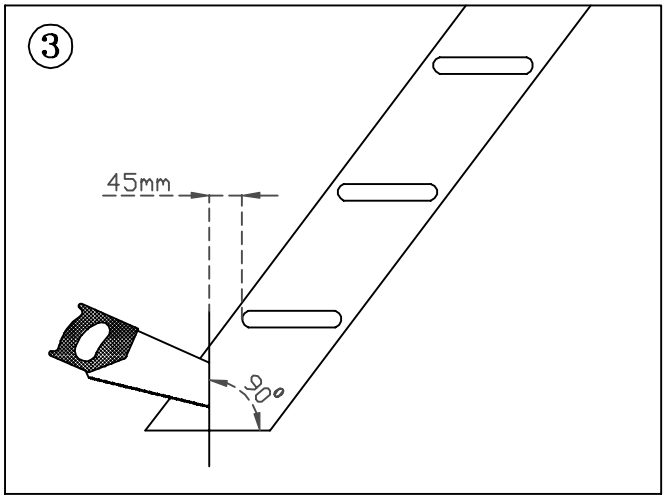
3
45mm
90°

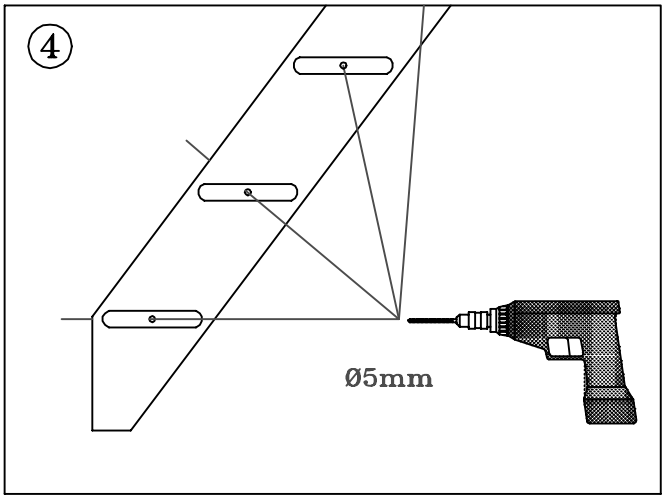
4
Ø5mm

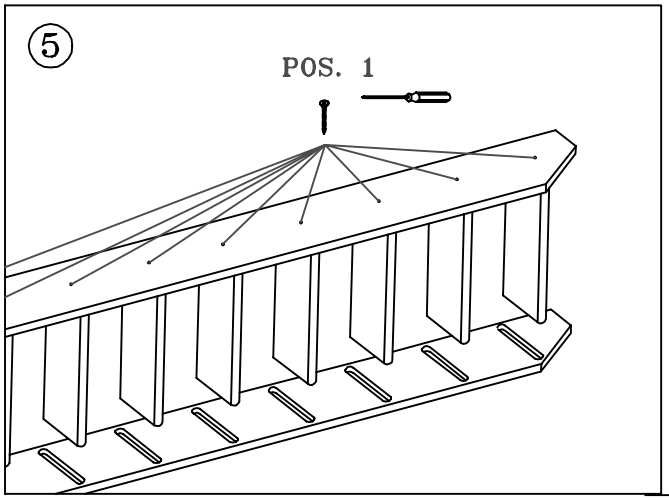
5
POS. 1

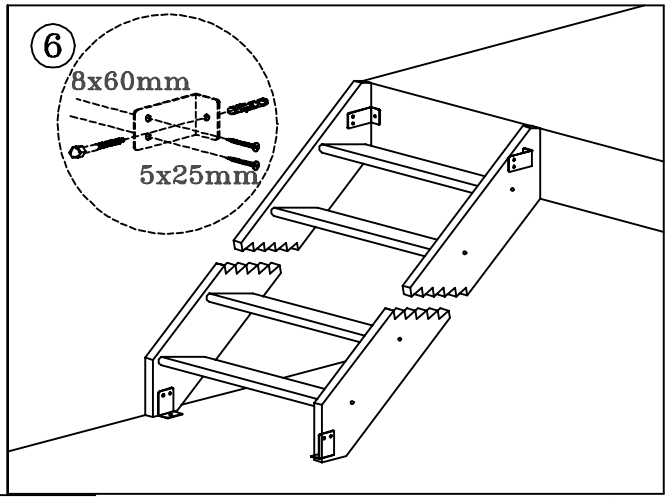
6
8x60mm
5x25mm

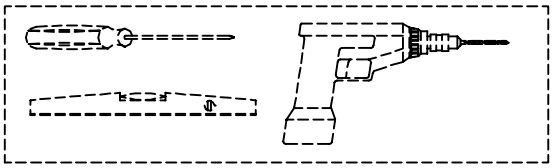

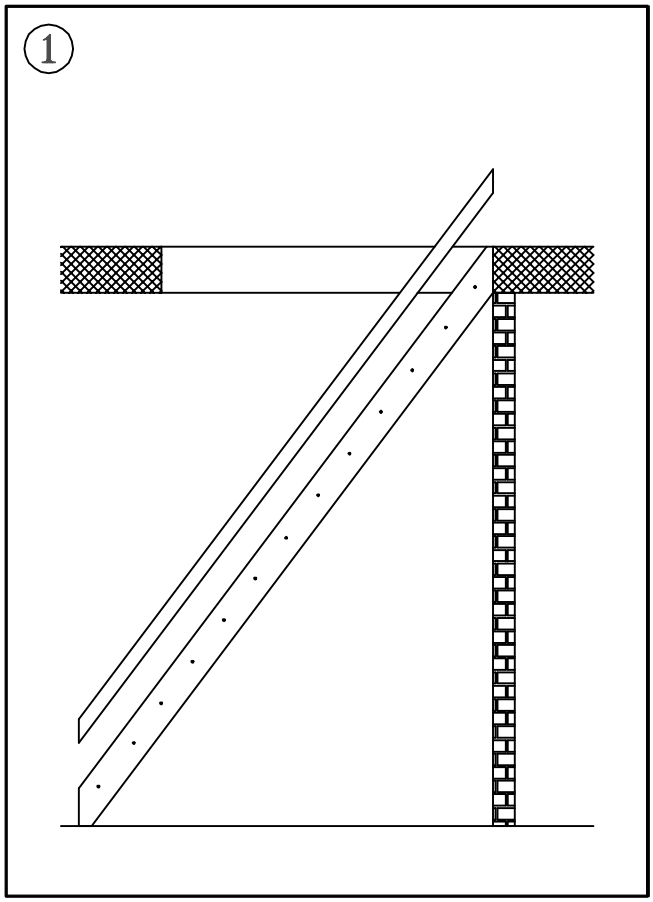
1

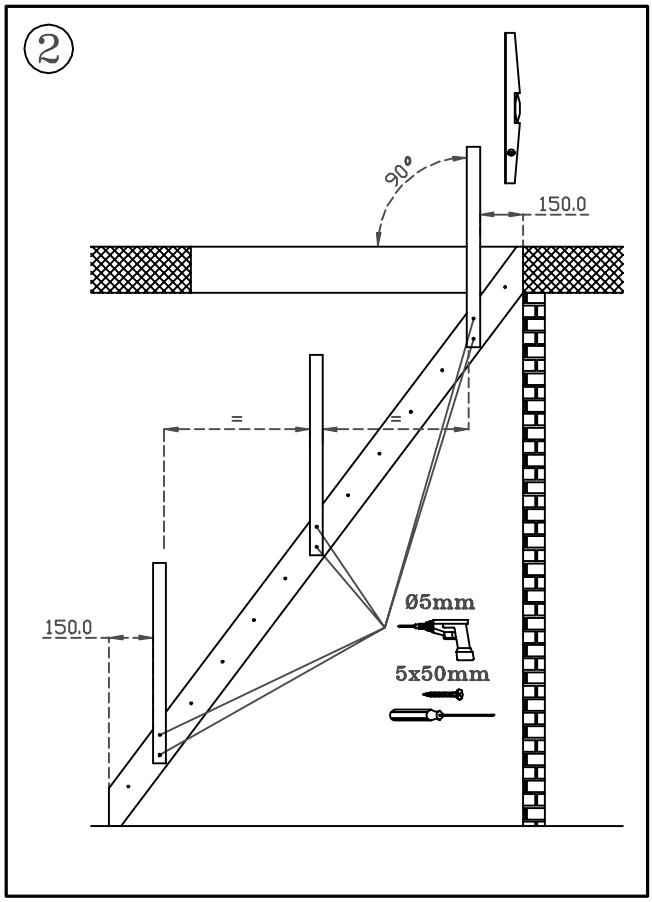
2
90°
150.0
=
=
150.0
Ø5mm
5x50mm

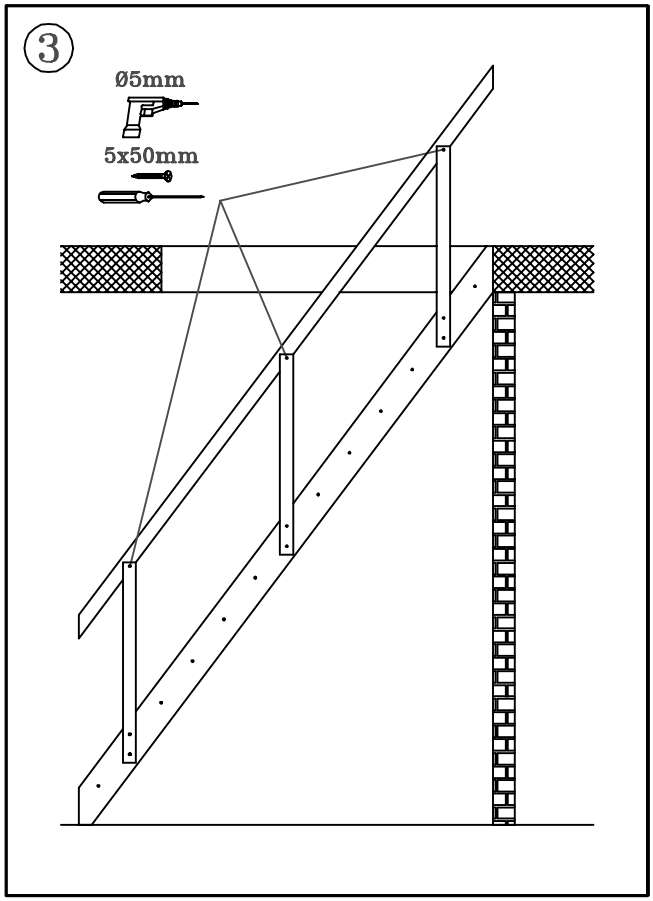
3
Ø5mm
5x50mm

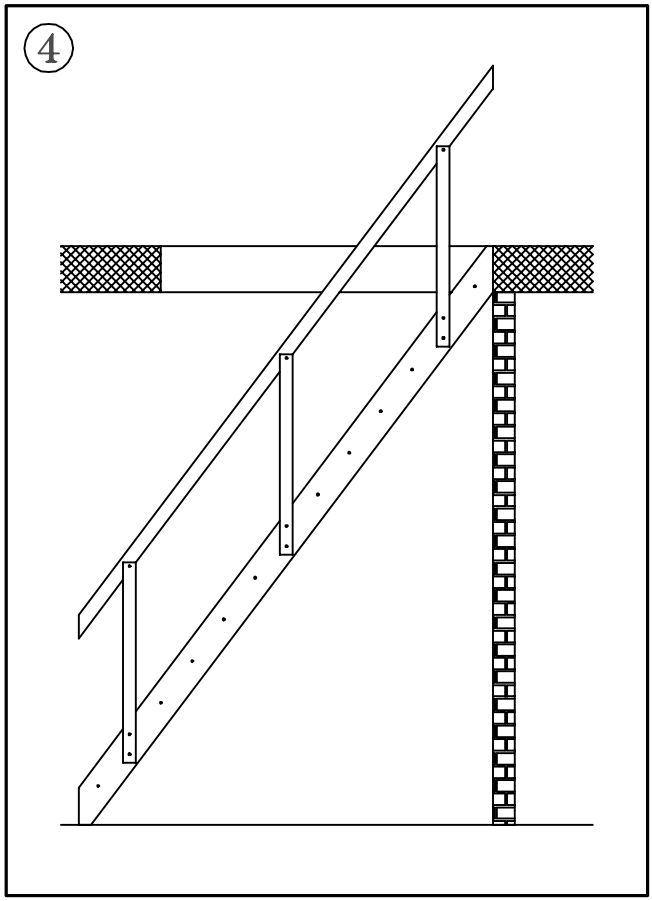
4