SKU : 288055-288057+288061-288063

Batch Nr : 2000050010

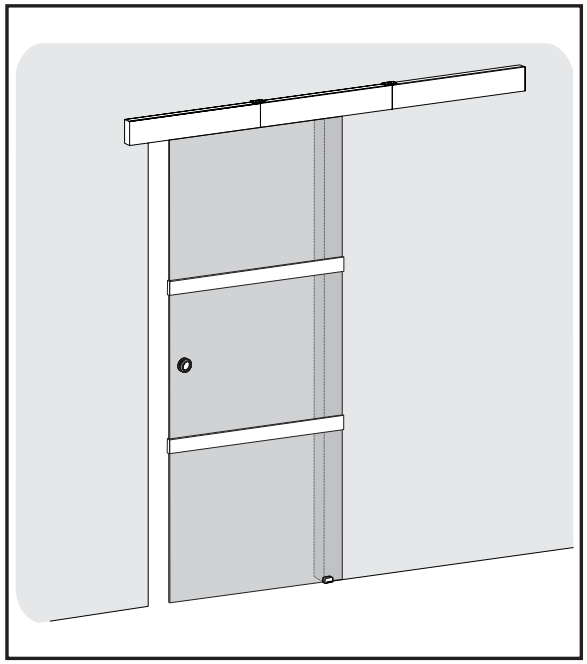

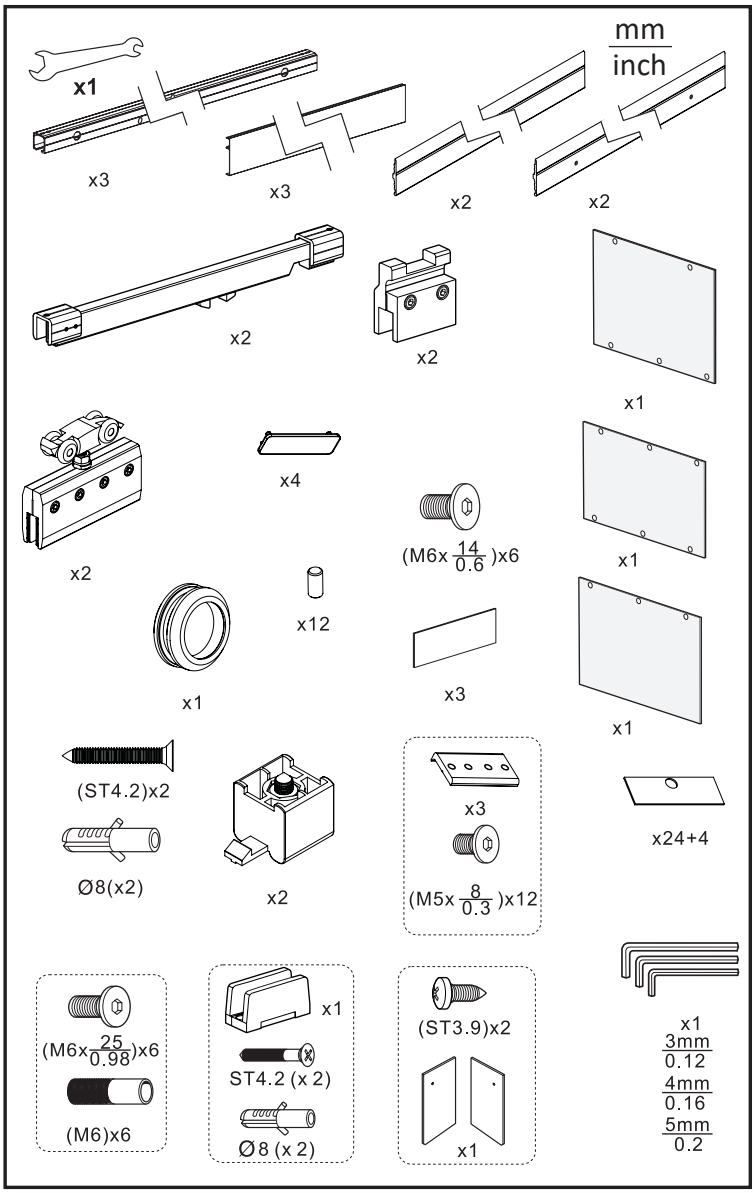

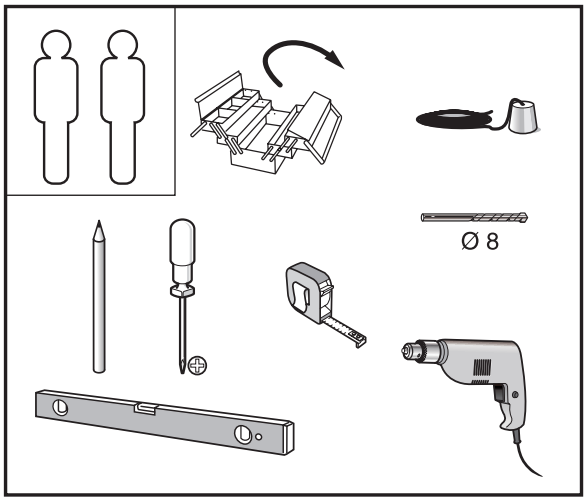

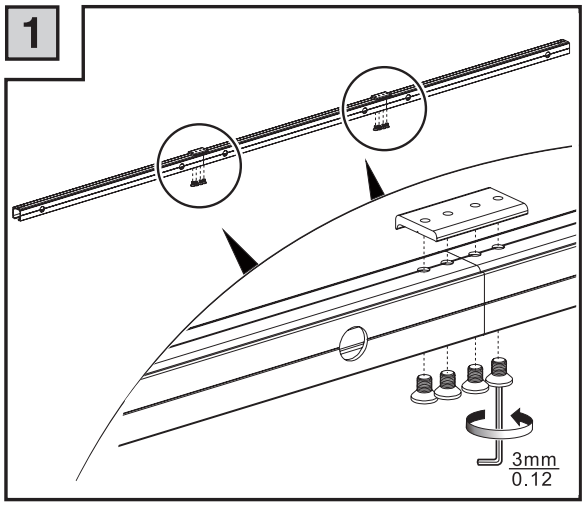

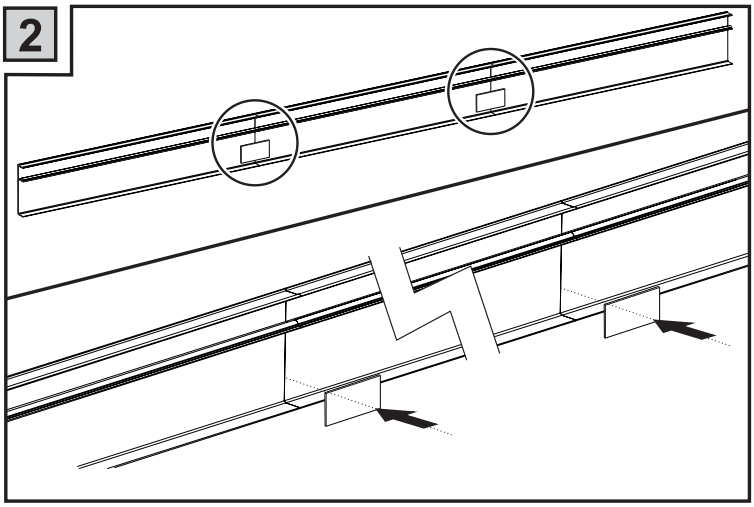

vidaXL | Haba Trading B.V. | Mary Kingsleystraat 1| 5928SK Venlo | The Netherlands
vidaXL | HB Commerce PTY LTD | Level 16, 201 Elizabeth Street | Sydney NSW 2000 | Australia
vidaXL | vidaXL LLC | 2000 W. Baseline Road | Rialto CA 92376 | United States
www.vidaXL.com

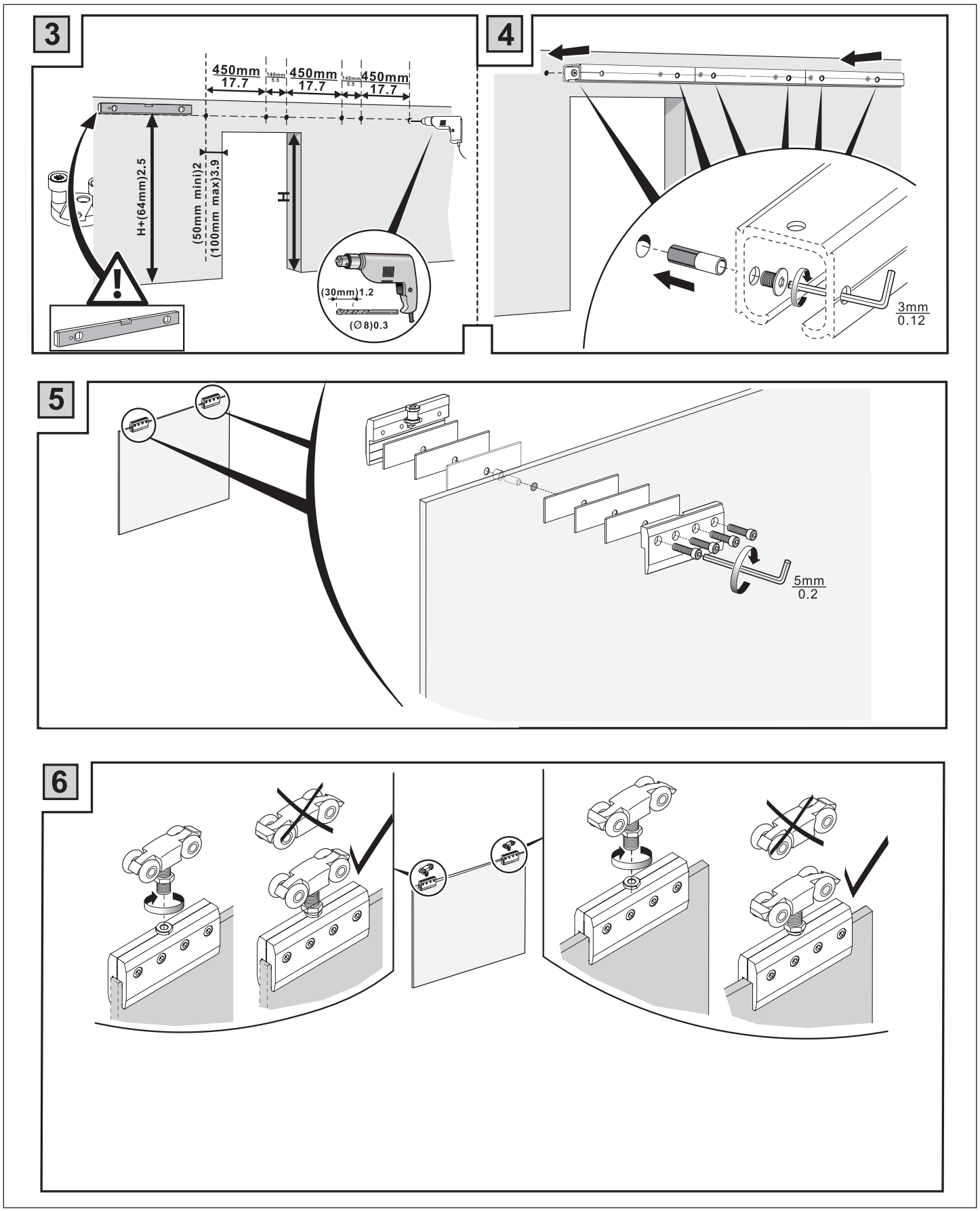
3
450mm
17.7
140mm
5.5
450mm
17.7
140mm
5.5
450mm
17.7
H+(64mm)2.5
(50mm mini)2
(100mm max)3.9
H
(30mm)1.2
(∅8)0.3
4
3mm
0.12
5
5mm
0.2
6

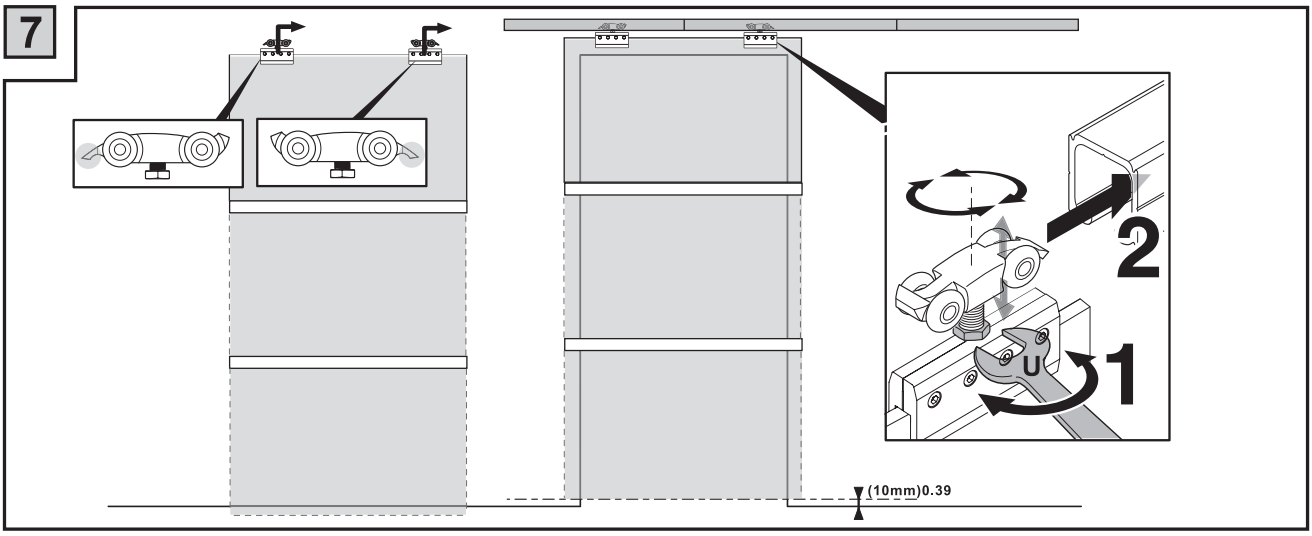
7
2
1
(10mm)0.39

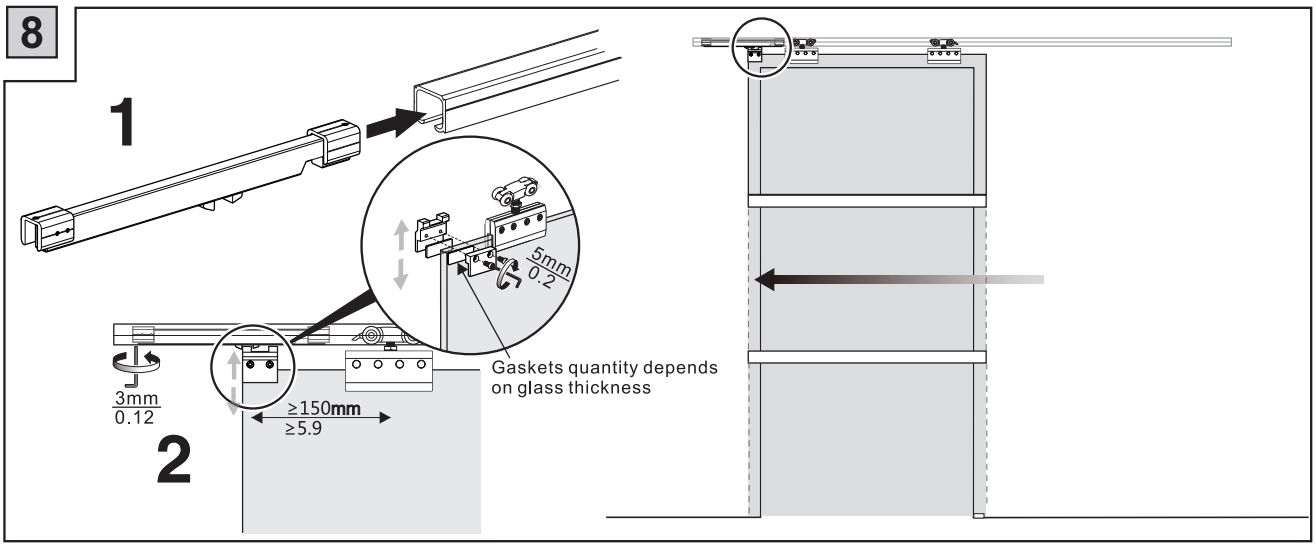
8
1
5mm
0.2
Gaskets quantity depends
on glass thickness
3mm
0.12
≥150mm
≥5.9
2

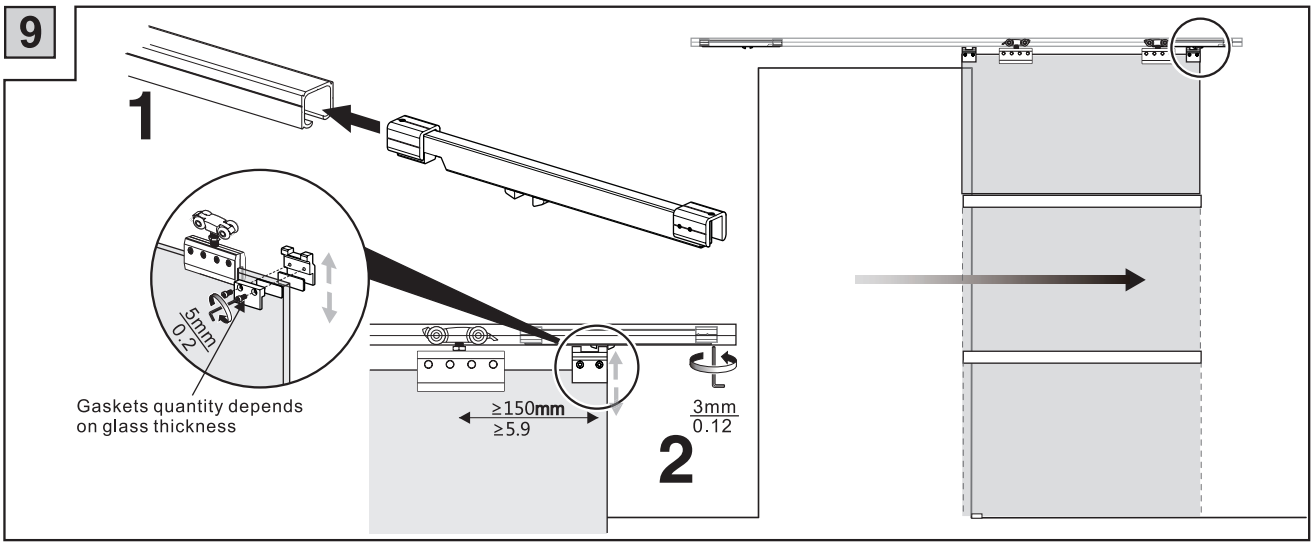
9
1
5mm
0.2
Gaskets quantity depends
on glass thickness
≥150mm
≥5.9
3mm
0.12
2

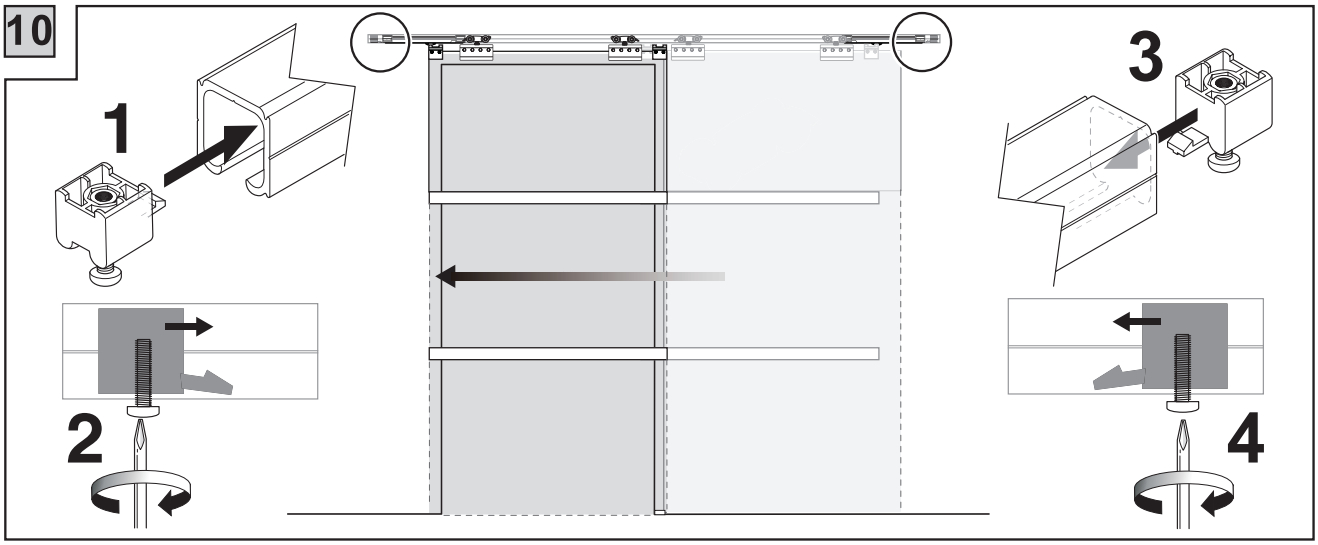
10
1
2
3
4

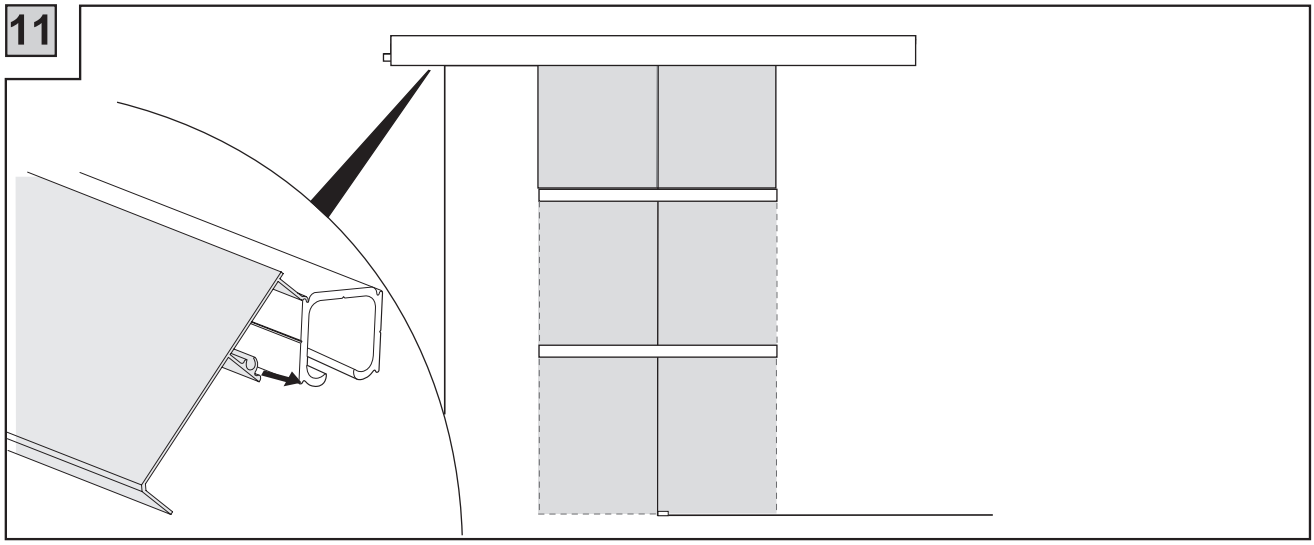
11

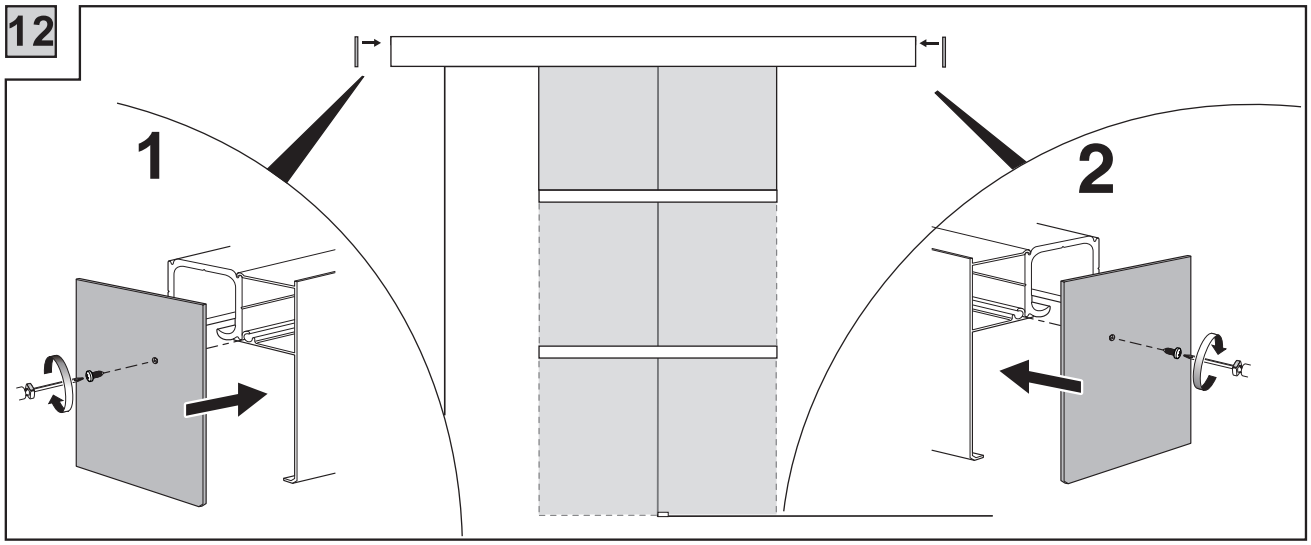
12
1
2

13

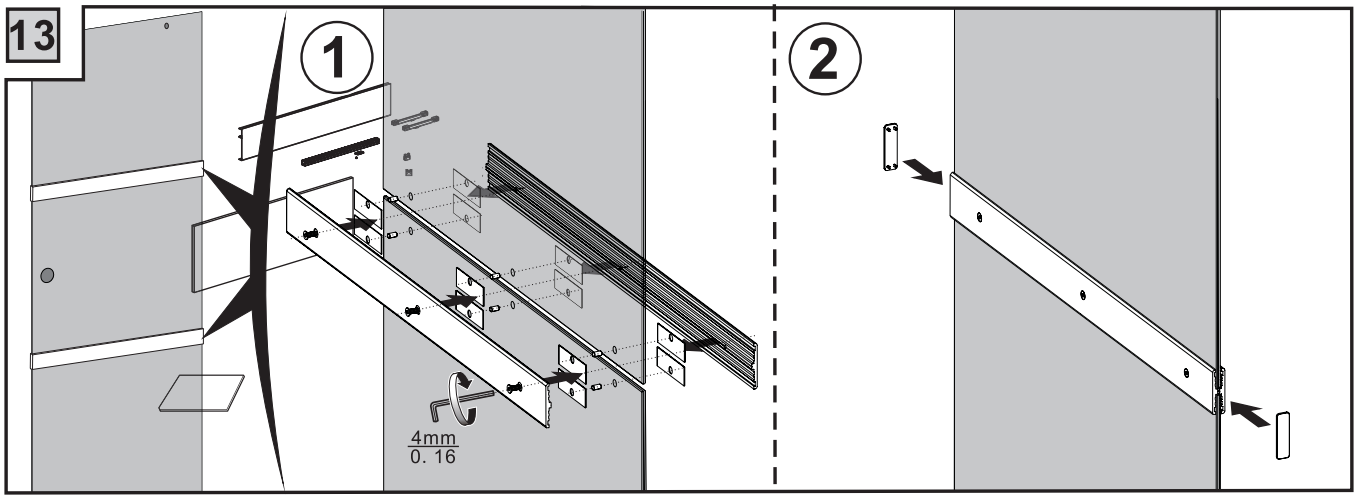

14

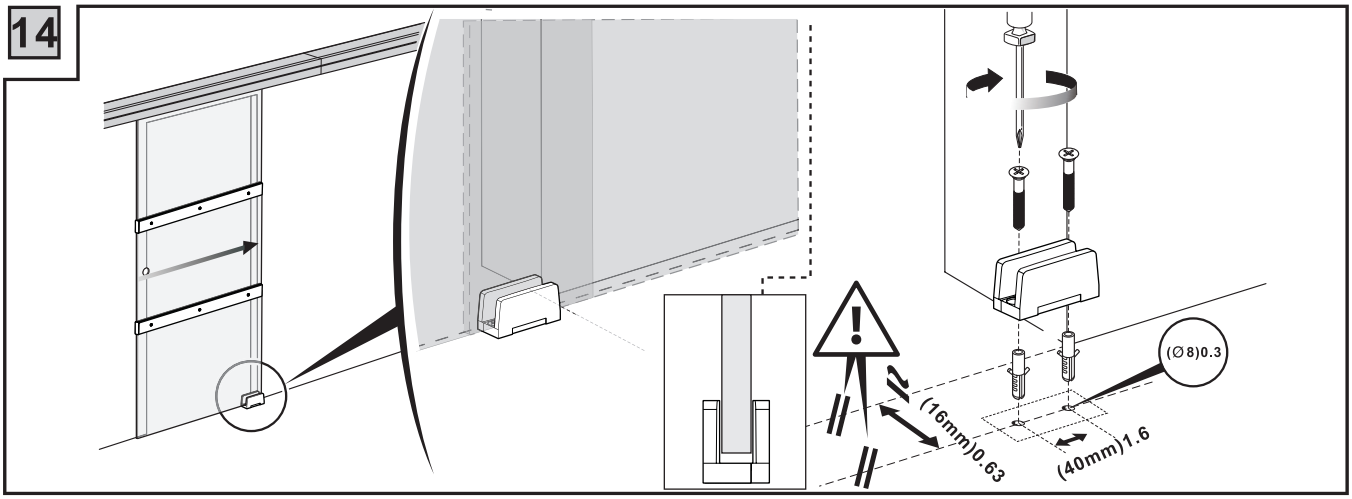
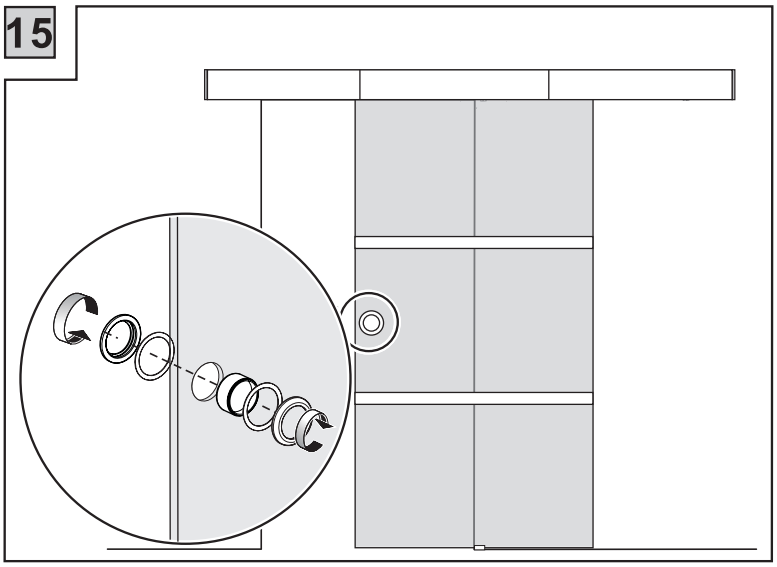
15