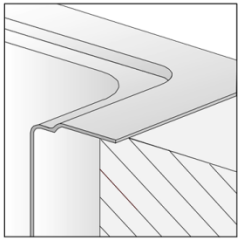

1

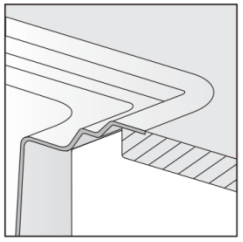

1

1

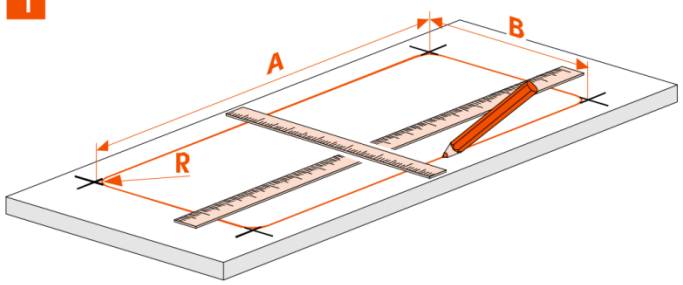


2

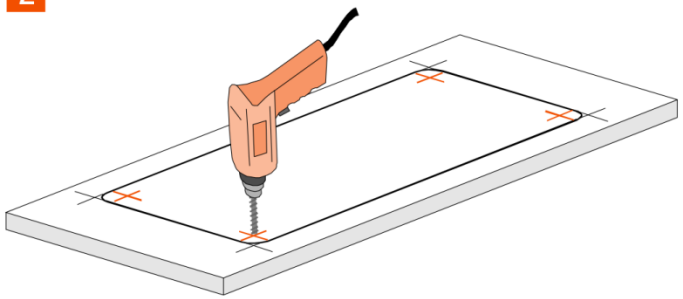

3

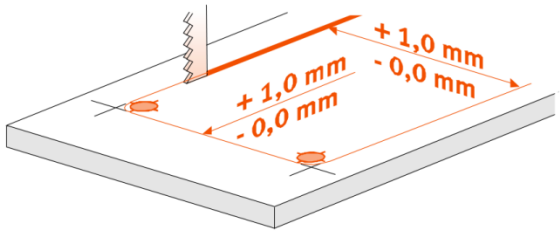


4

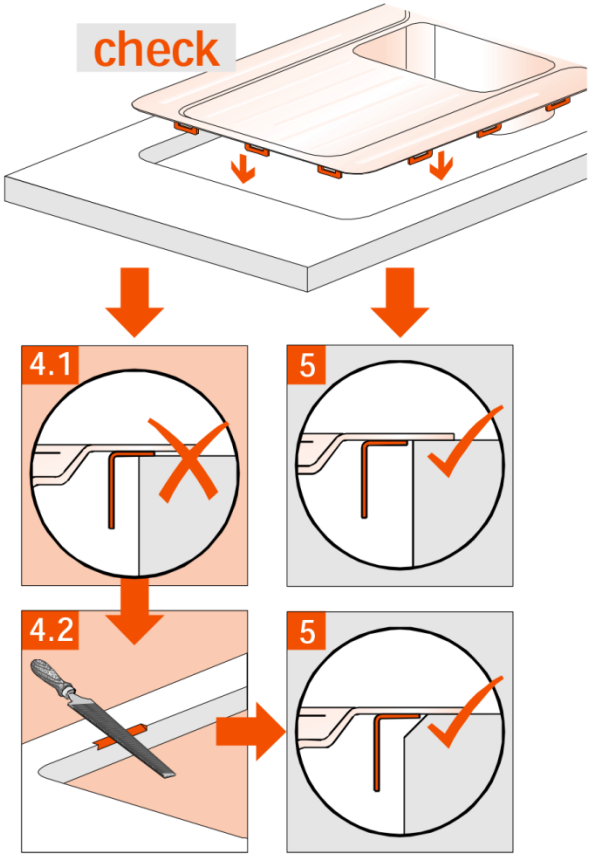


6

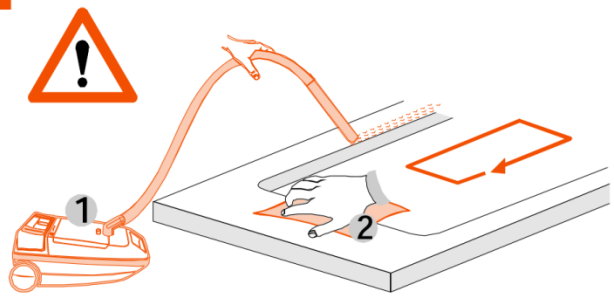


7

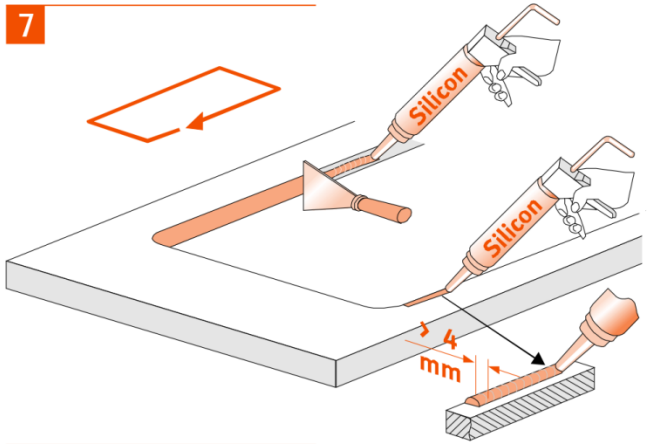


8

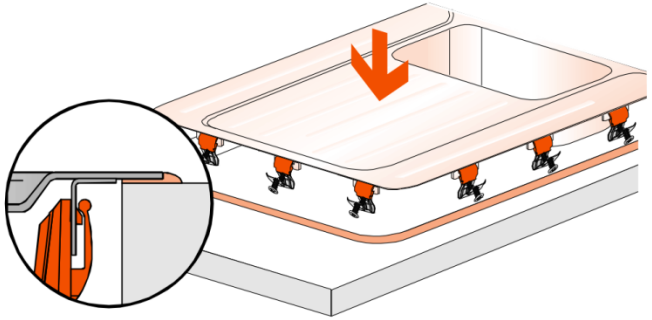

9

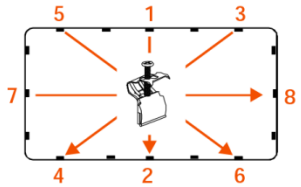


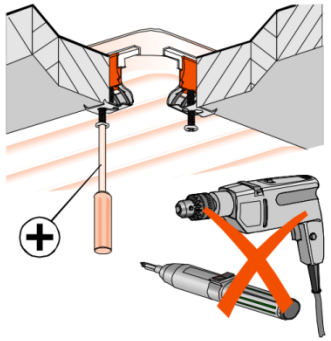

10

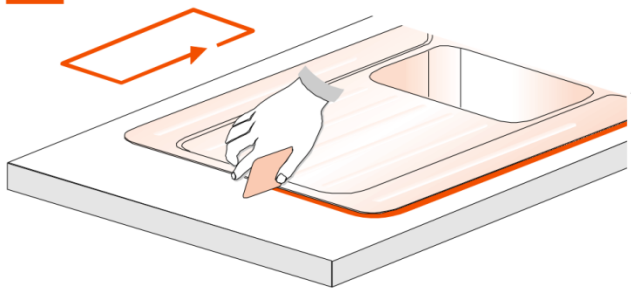

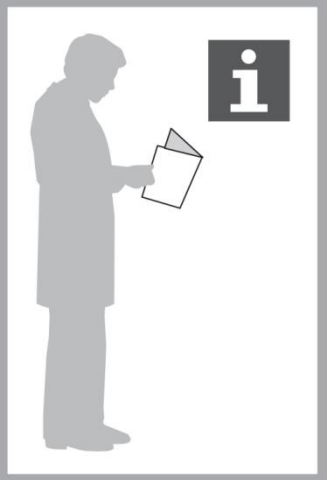

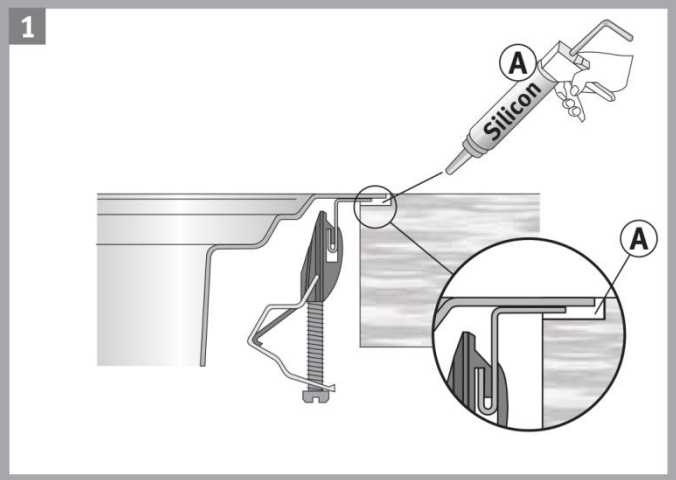
1
A
Silicon
A

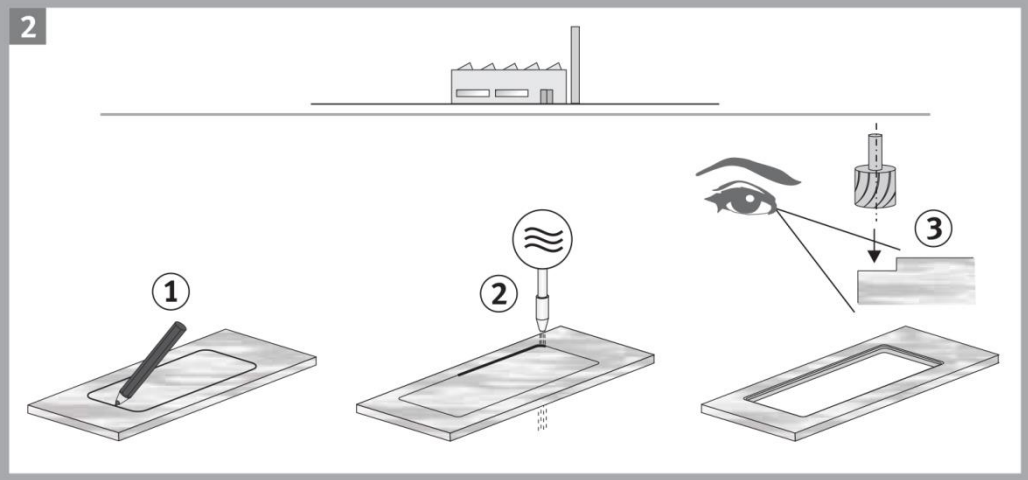
2
1
2
3

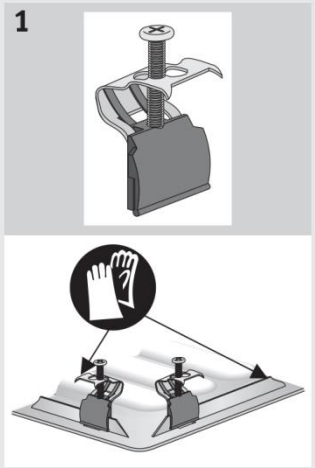
1

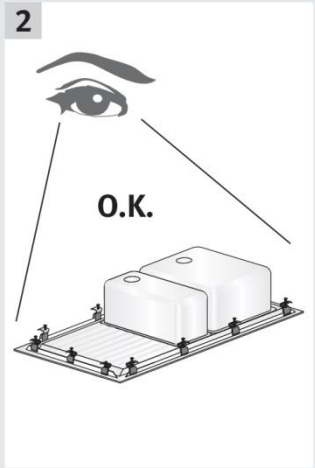
2
O.K.

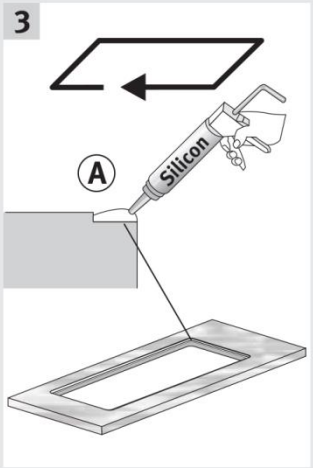
3
A
Silicon

4

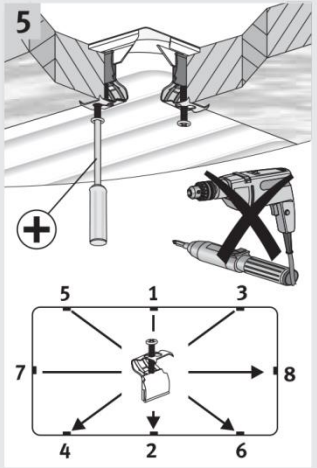
5
5
1
3
7
8
4
2
6

6

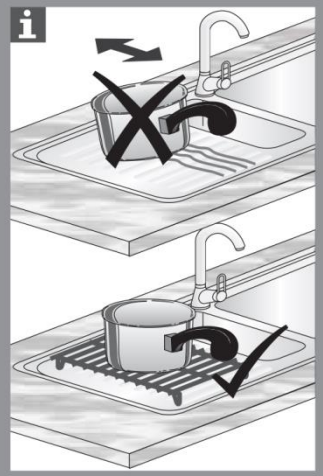

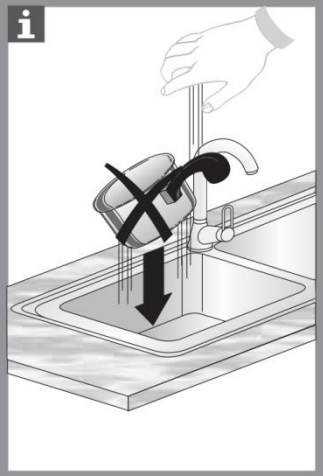

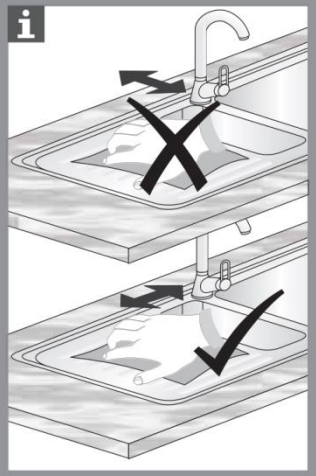

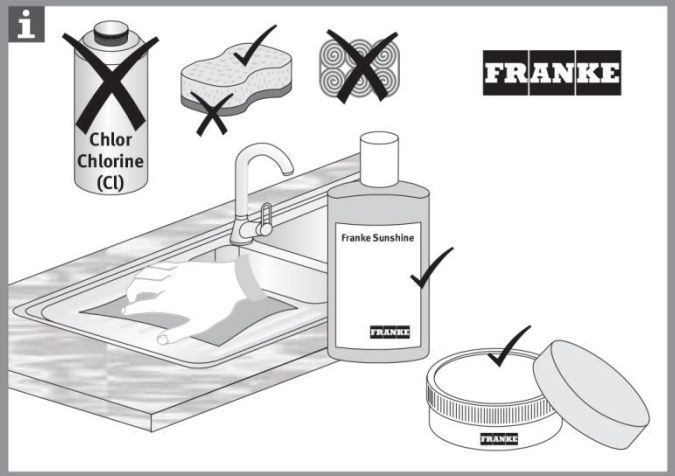
Chlor
Chlorine
(Cl)
FRANKE
Franke Sunshine
FRANKE
FRANKE