MI: KUBA

v.5



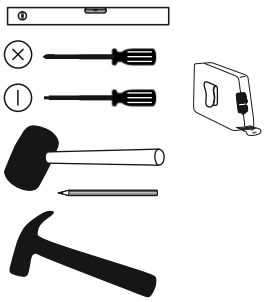

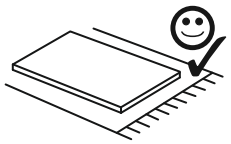

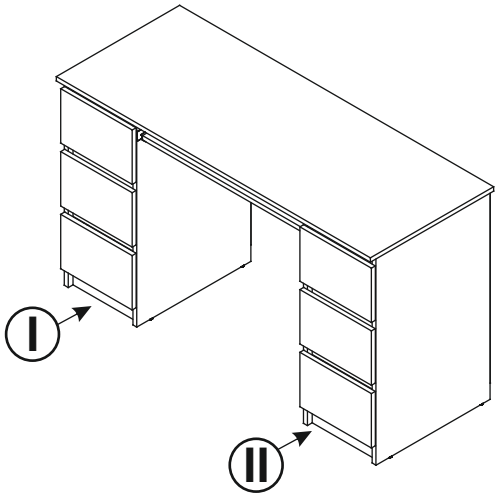

RL 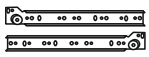 L - 350 x 6 kpl.	D  5 x 13ES x 28	S3  4 x 12 UP x 24	1S  4 x 20 US x 24	G 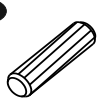 x 60	F 	C 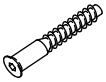 x 4
H  x 44	E 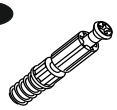 x 44	ZA  x 44	P  x 8	2S  3 x 13 x 18	RL2  L - 400 x 1 kpl.	KL 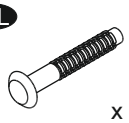 x 24
Z  x 1						

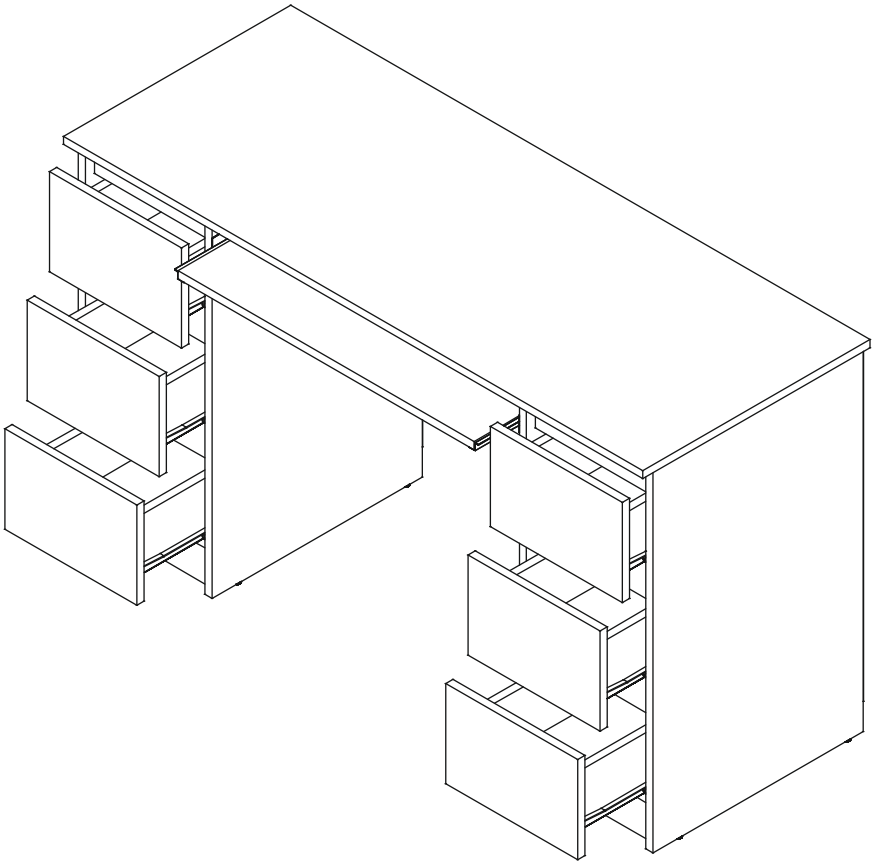

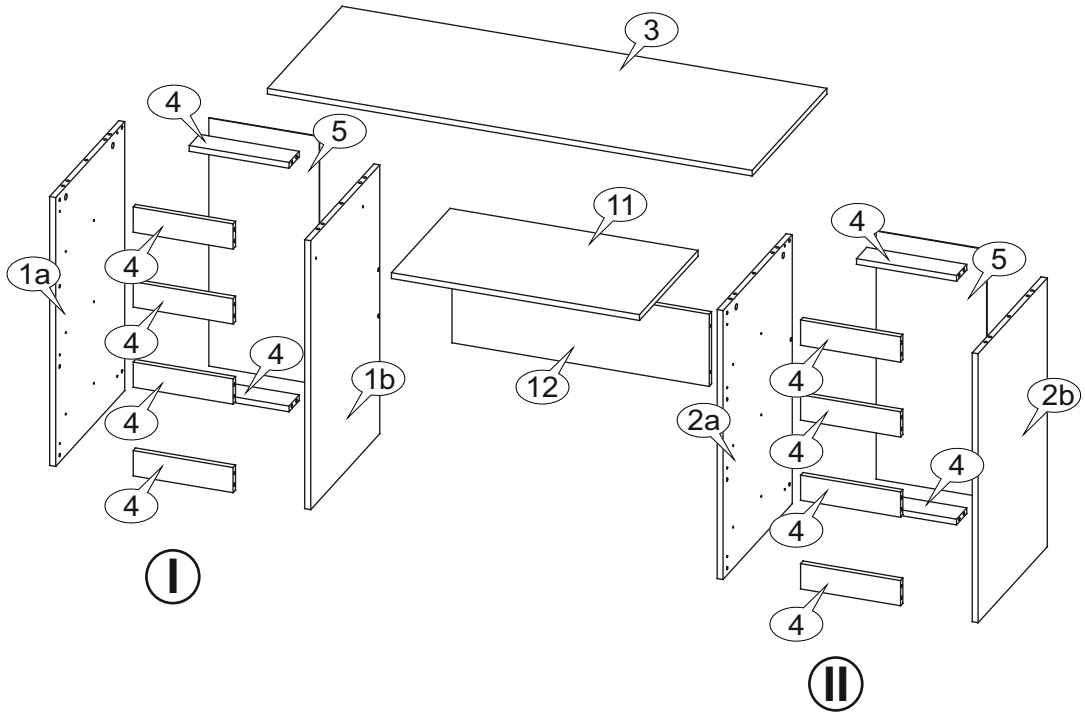
3
4
5
1a
4
4
4
4
4
1b
11
12
4
5
2a
4
4
4
4
4
2b
I
II

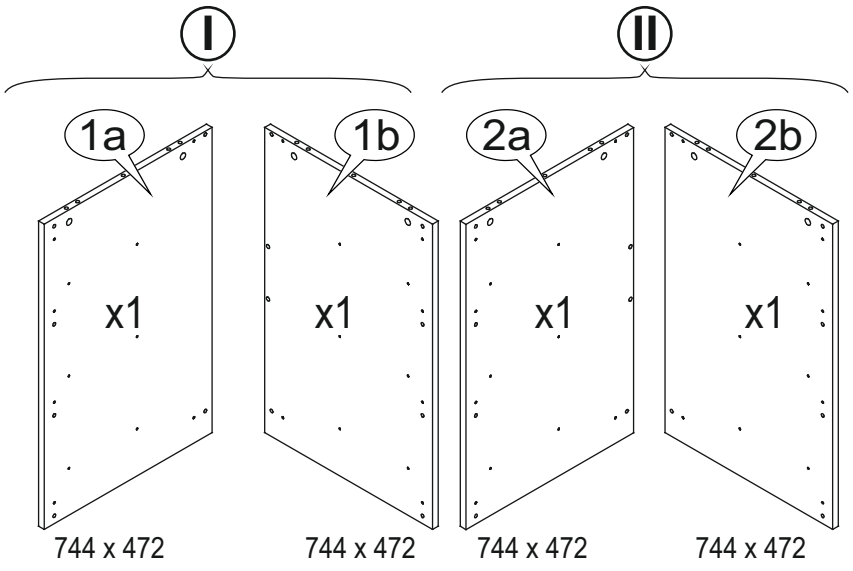
I
II
1a
1b
2a
2b
x1
x1
x1
x1
744 x 472
744 x 472
744 x 472
744 x 472

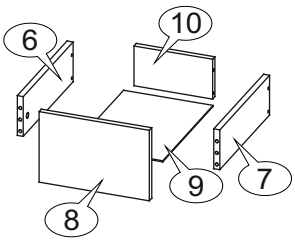
6
10
9
7
8

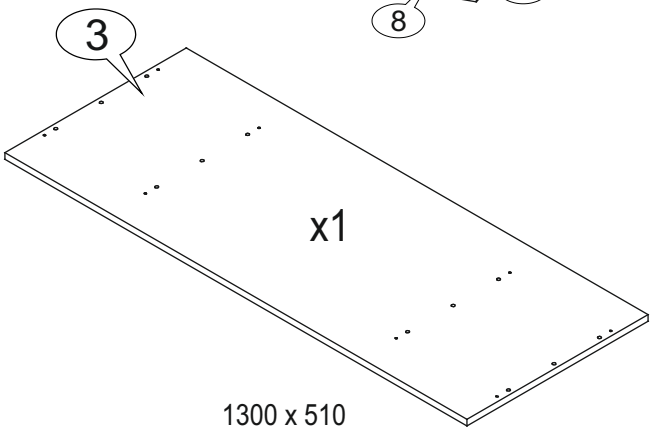
3
x1
1300 x 510

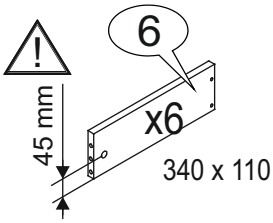
!
6
45 mm
x6
340 x 110

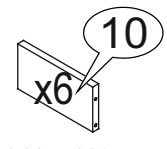
10
x6
211 x 110

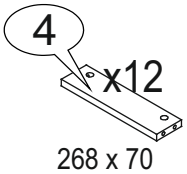
4
x12
268 x 70

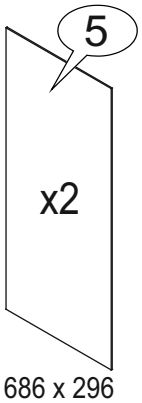
5
x2
686 x 296

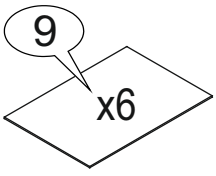
9
x6
240 x 344

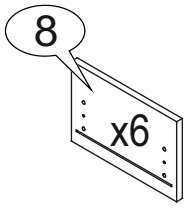
8
x6
195 x 296

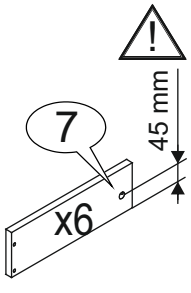
!
45 mm
7
x6
340 x 110

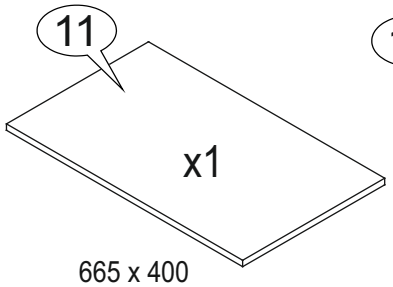
11
x1
665 x 400

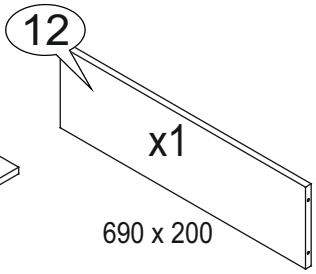
12
x1
690 x 200

1

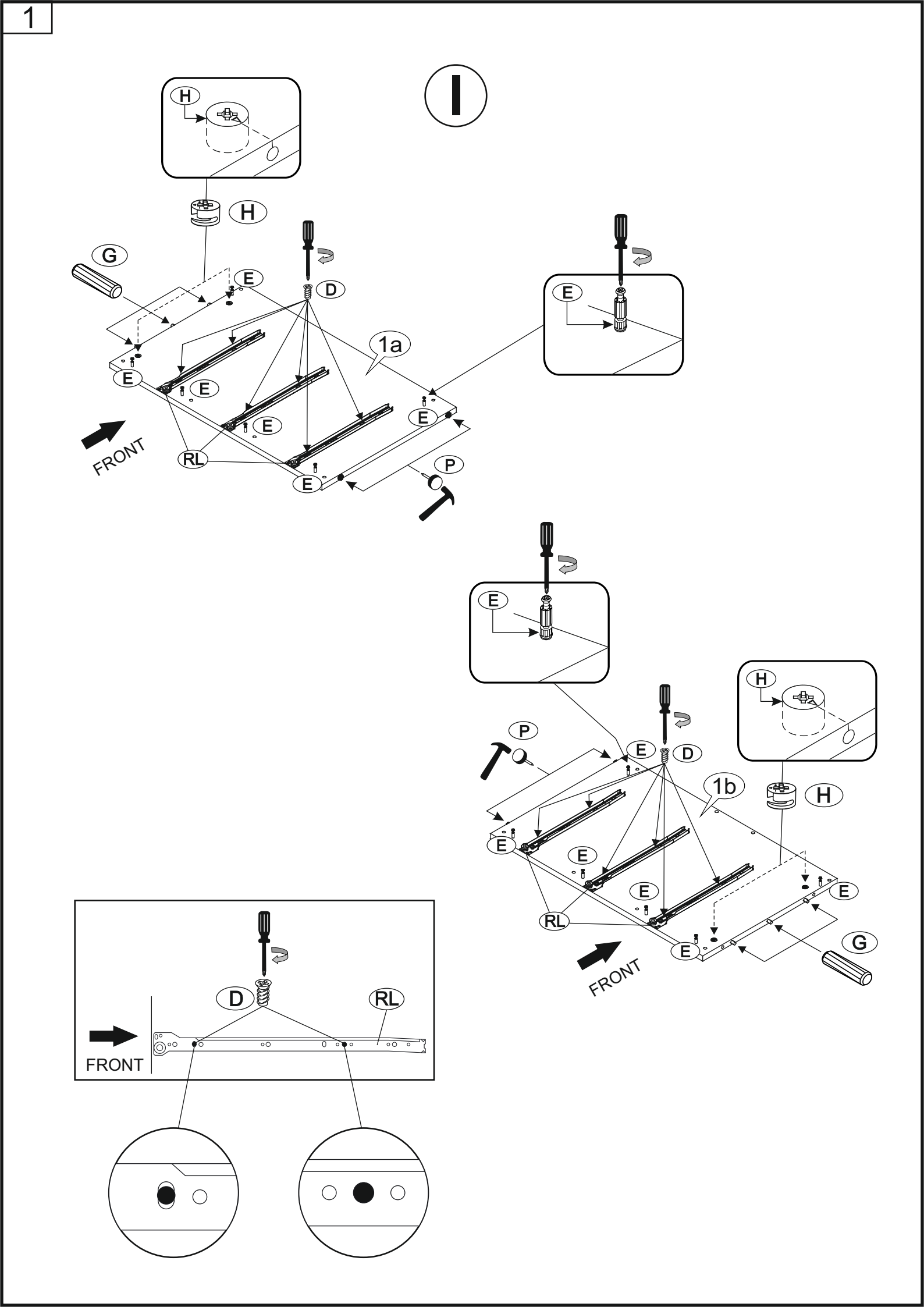

I
H
H
G
E
D
E
1a
E
E
E
E
E
RL
P
FRONT
E
E
H
P
E
D
1b
H
E
E
E
E
RL
E
G
FRONT
D
RL
FRONT

II

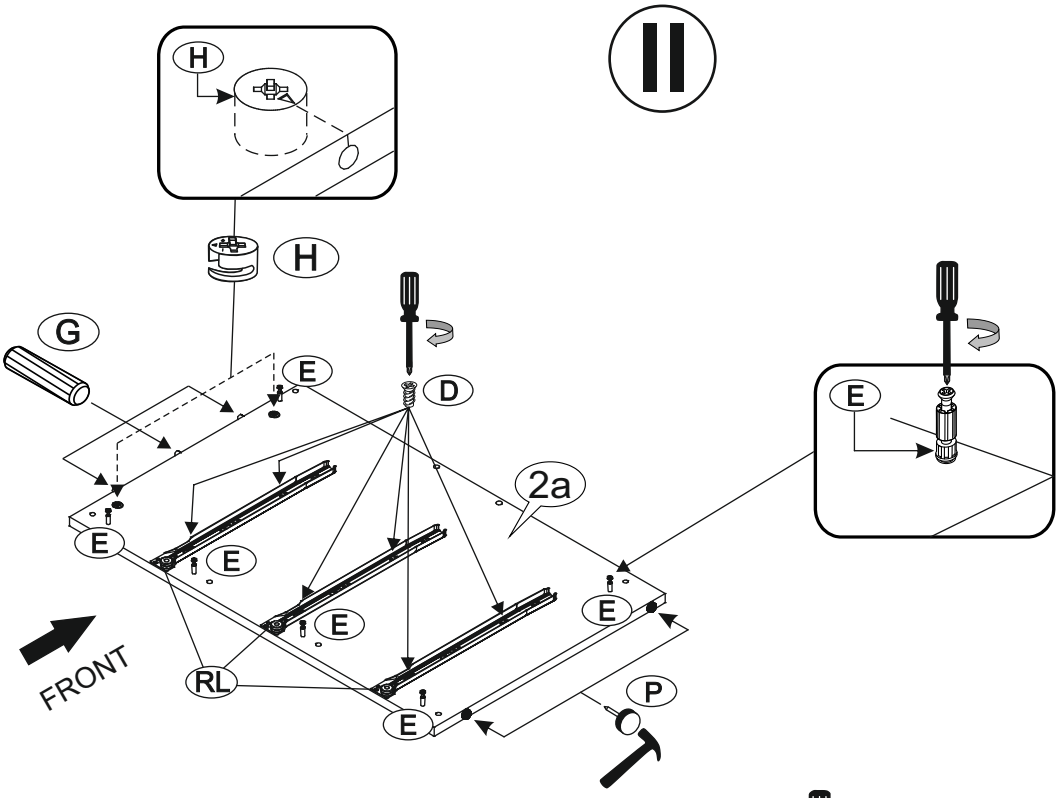
H
H
G
E
D
E
2a
E
E
E
E
E
E
FRONT
RL
P
E

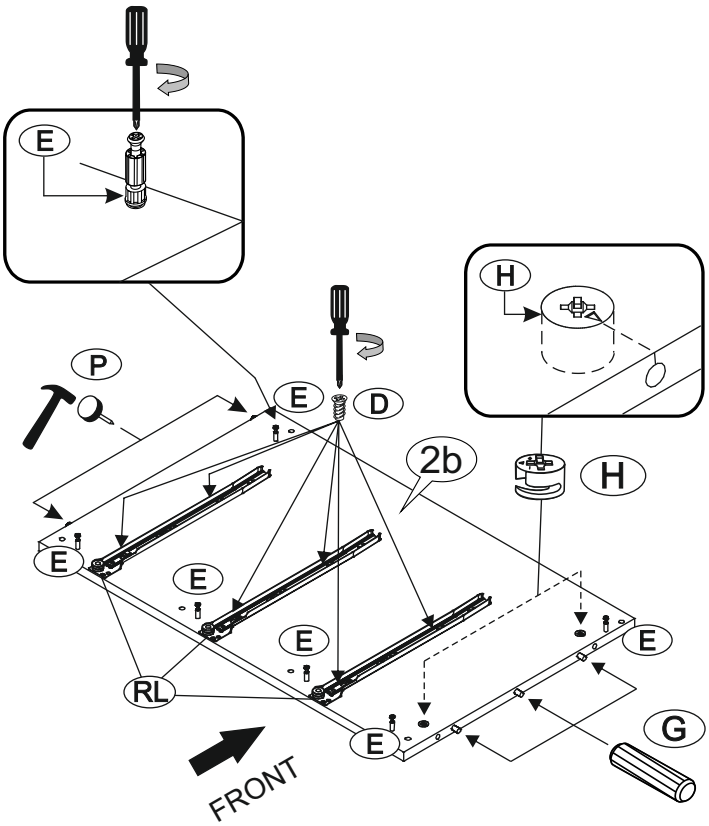
E
H
P
E
D
2b
H
E
E
E
E
RL
E
G
FRONT

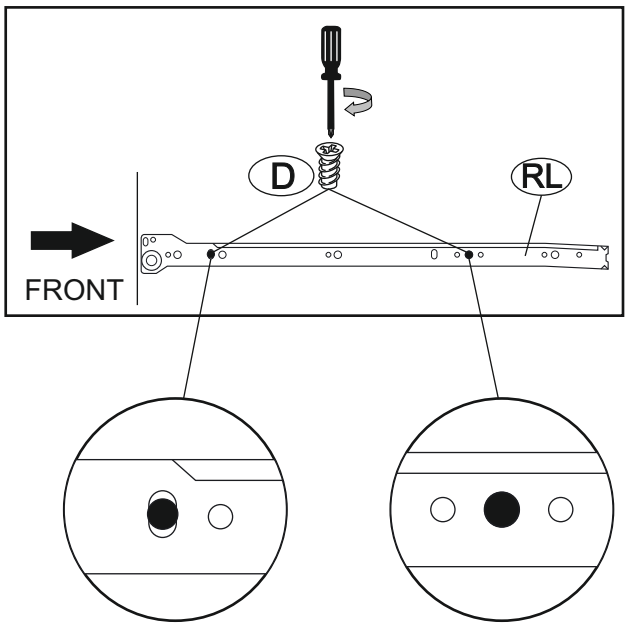
D
RL
FRONT

3

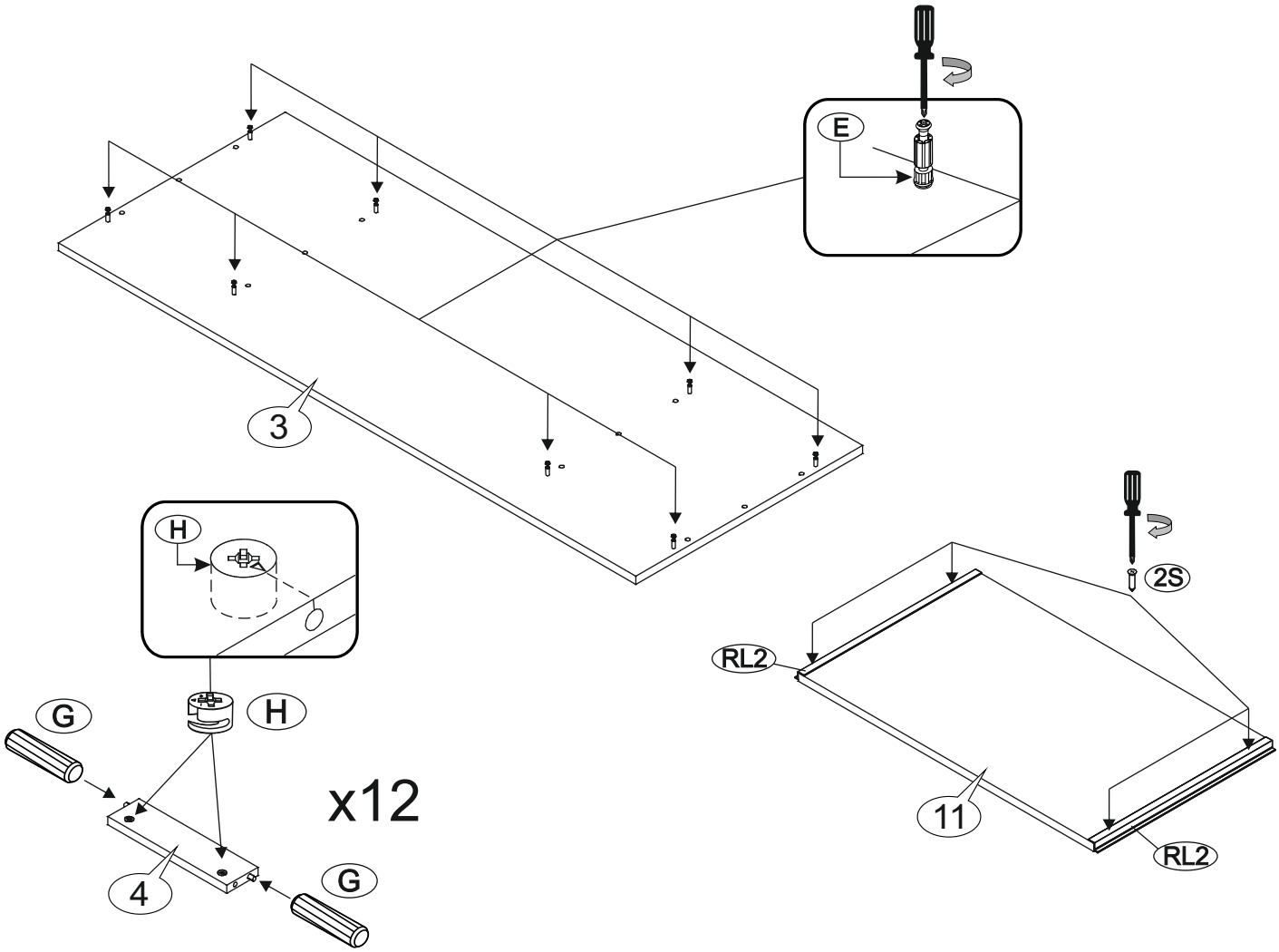
E
3
H
G
H
x12
4
G
2S
RL2
11
RL2

4

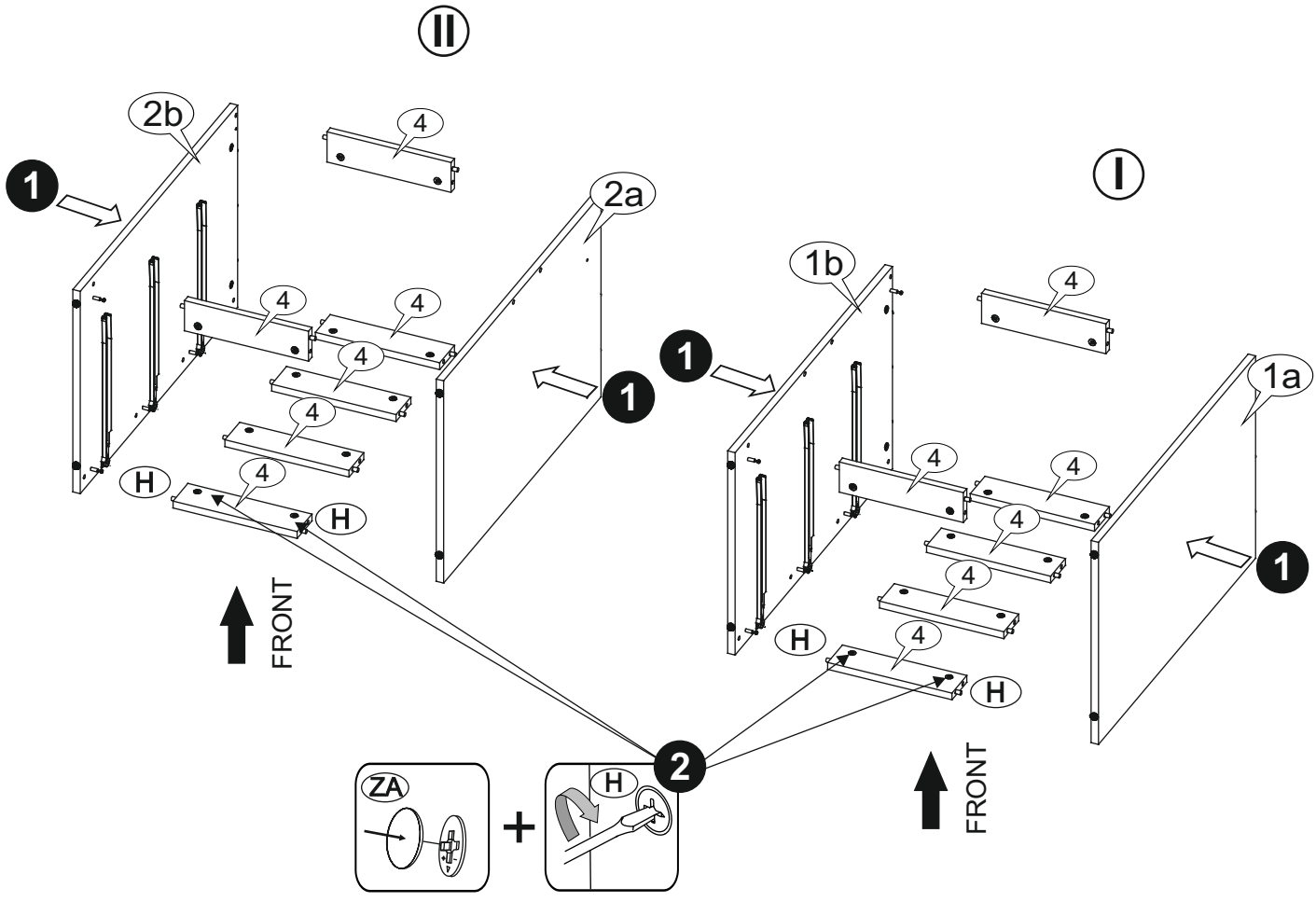
II
2b
4
1
2a
4
4
4
4
4
4
H
H
FRONT
I
1b
4
1
1a
4
4
4
4
4
H
H
1
2
ZA
+
H
FRONT

5

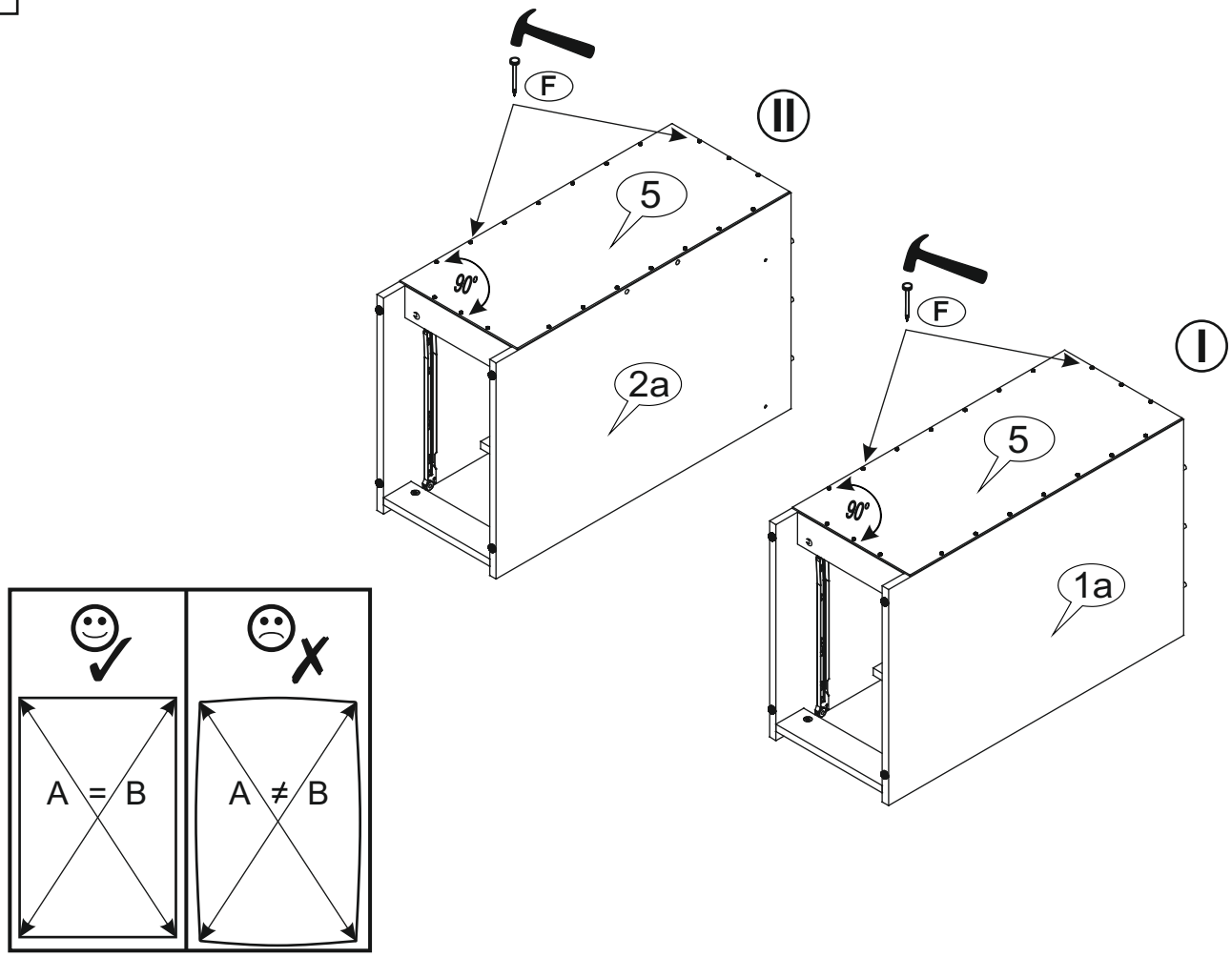

6

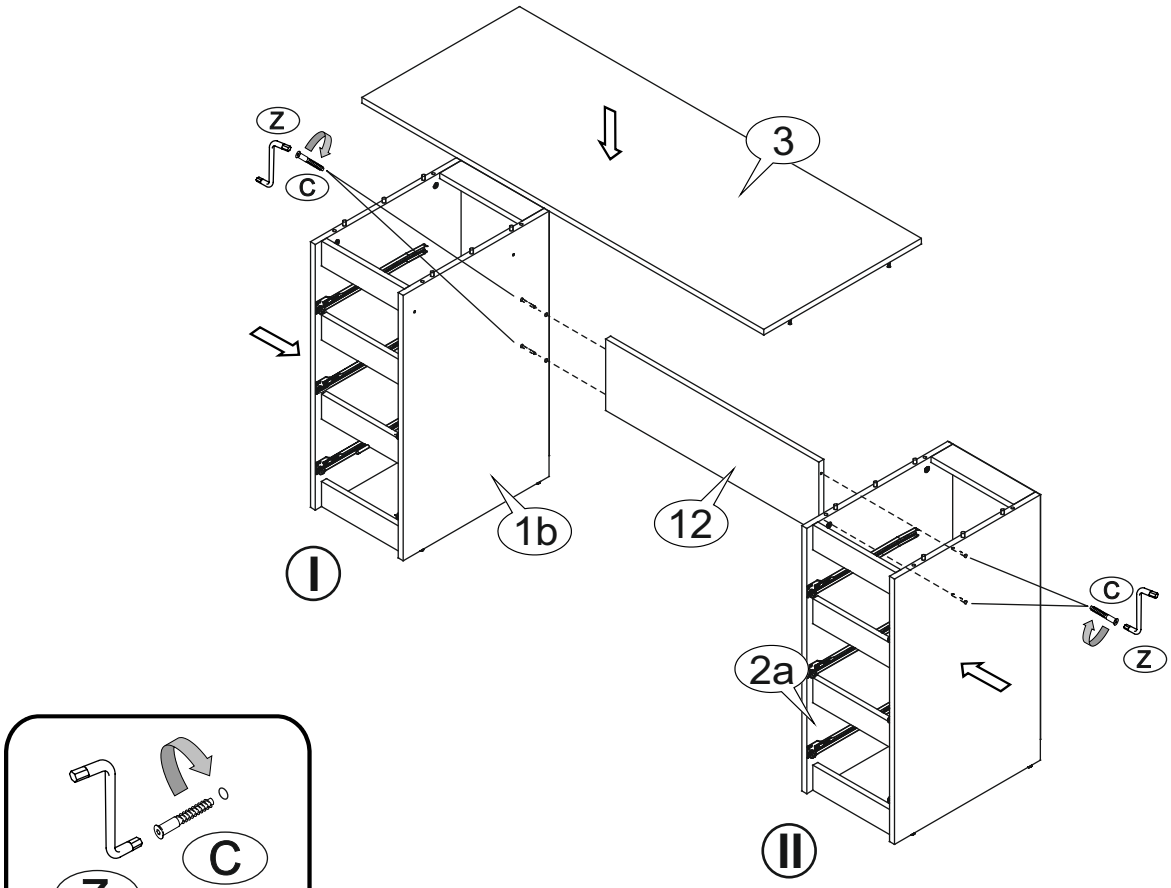

7

x6

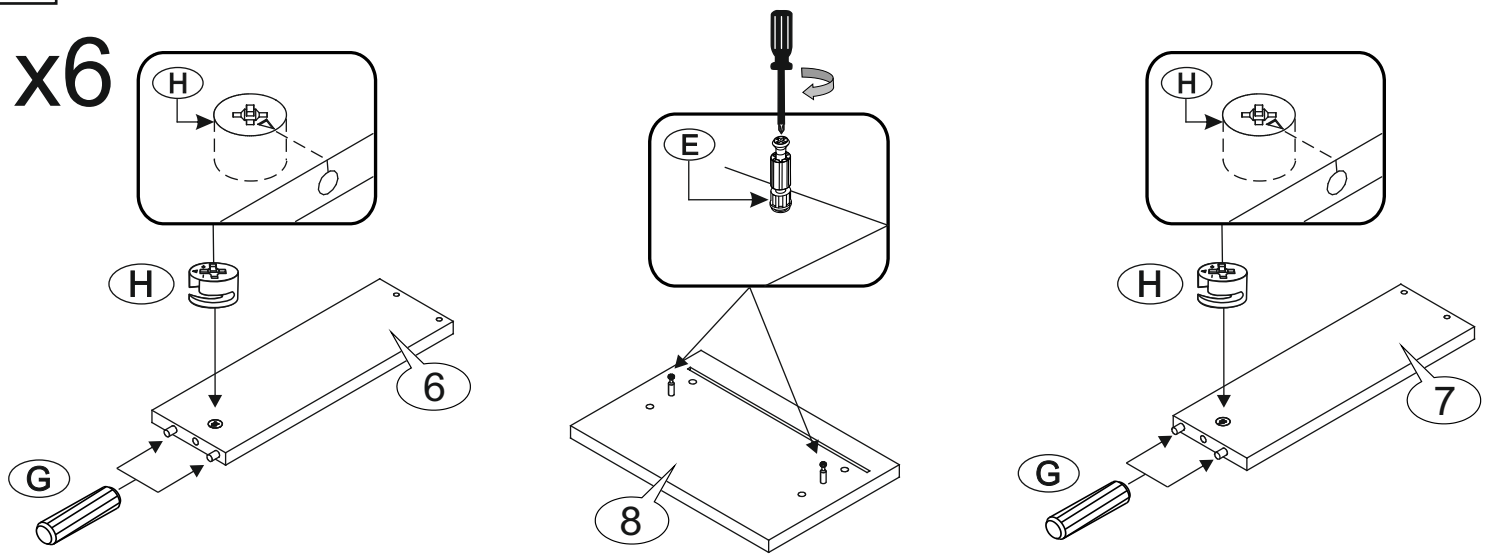

8

x6

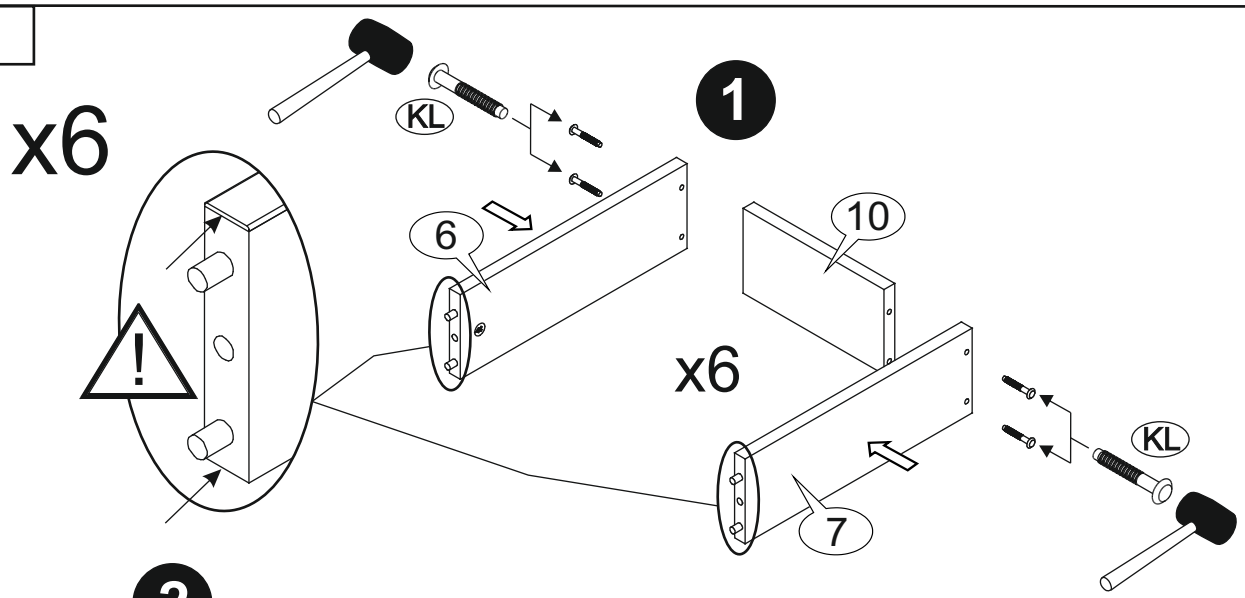

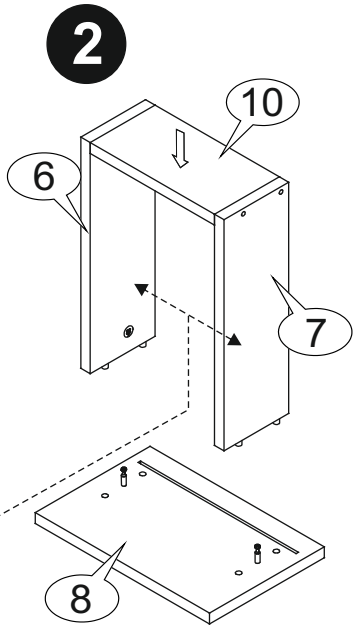

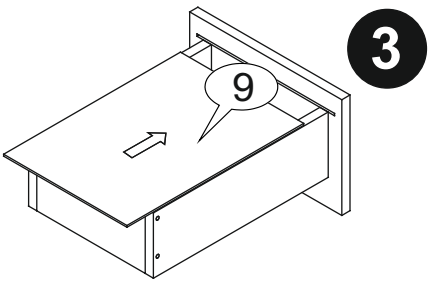

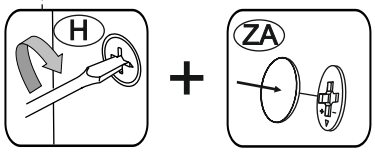

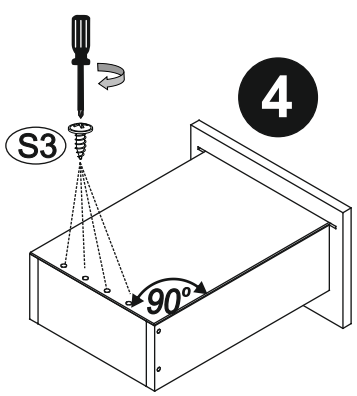

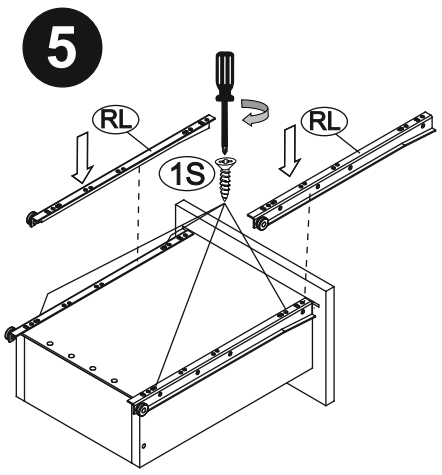

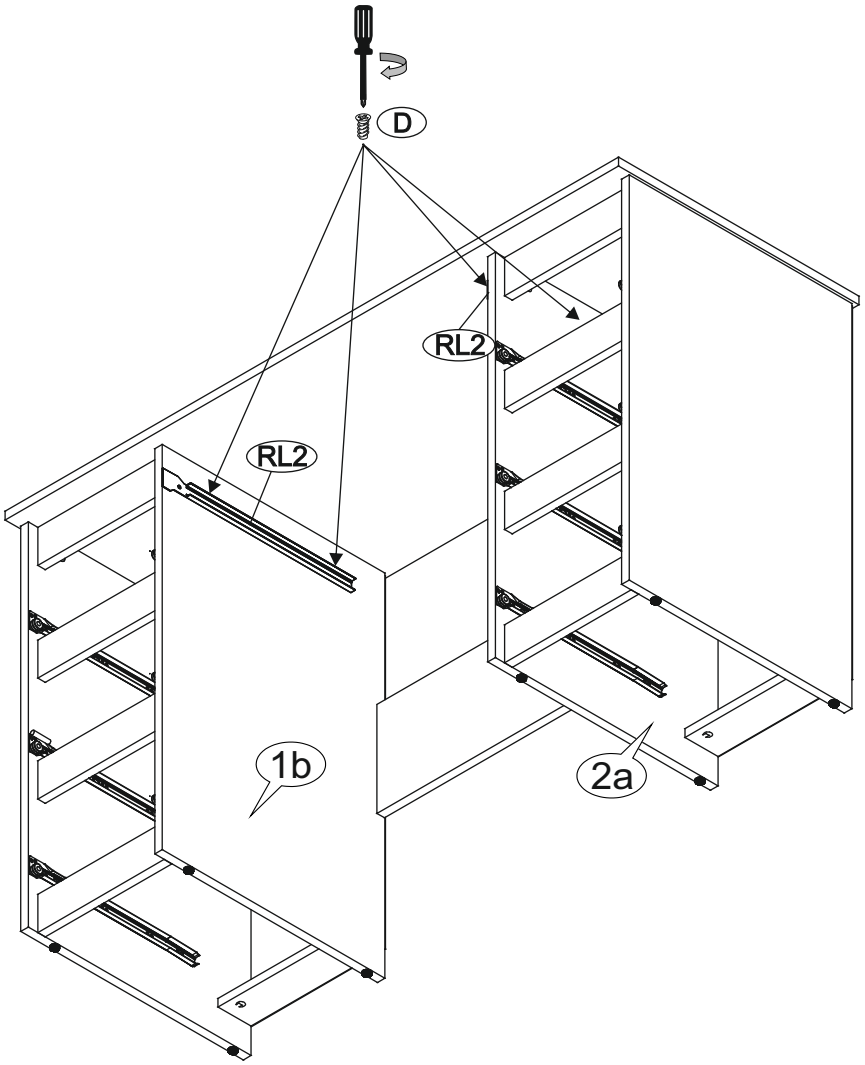
D
RL2
RL2
1b
2a

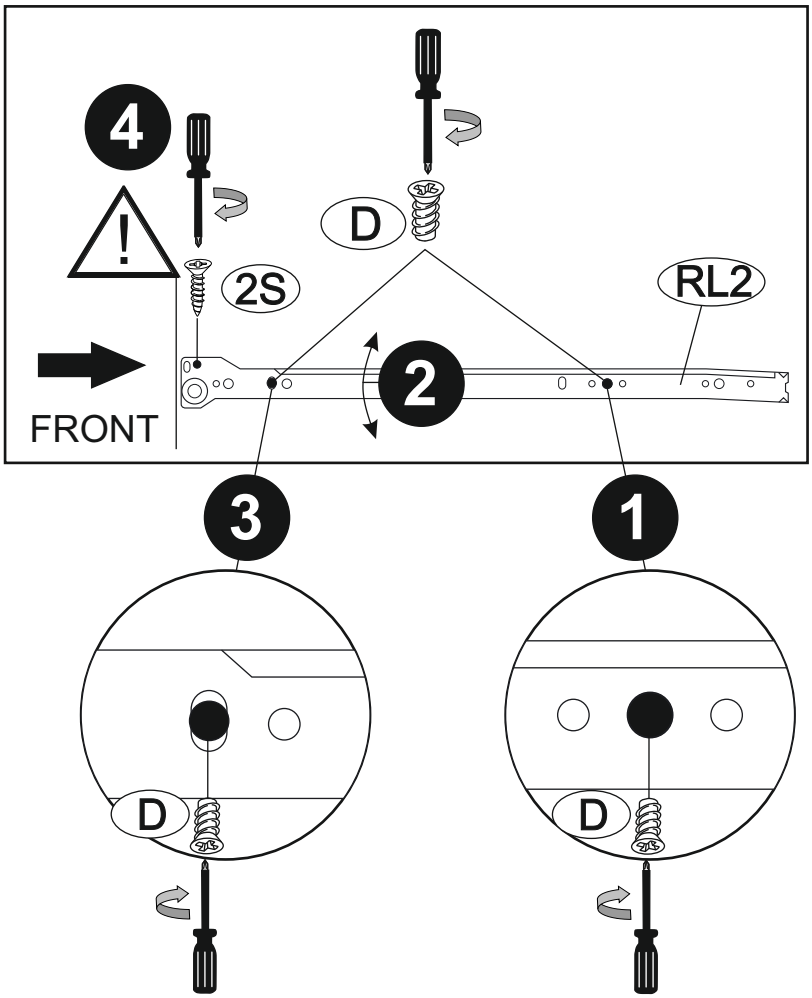
4
!
2S
D
RL2
2
FRONT
3
1
D
D

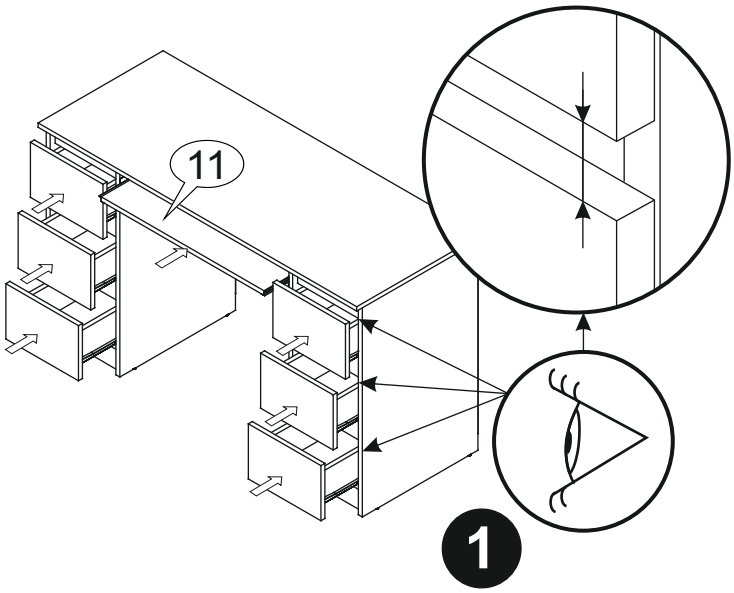
11
1

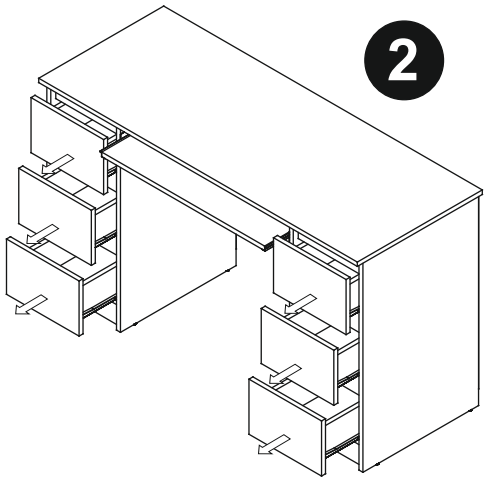
2

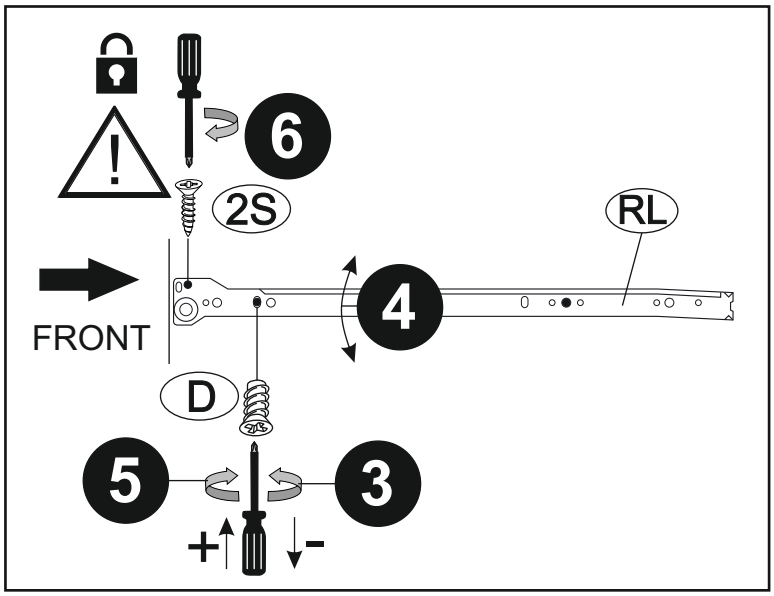
6
2S
RL
FRONT
4
D
5
3
+
-

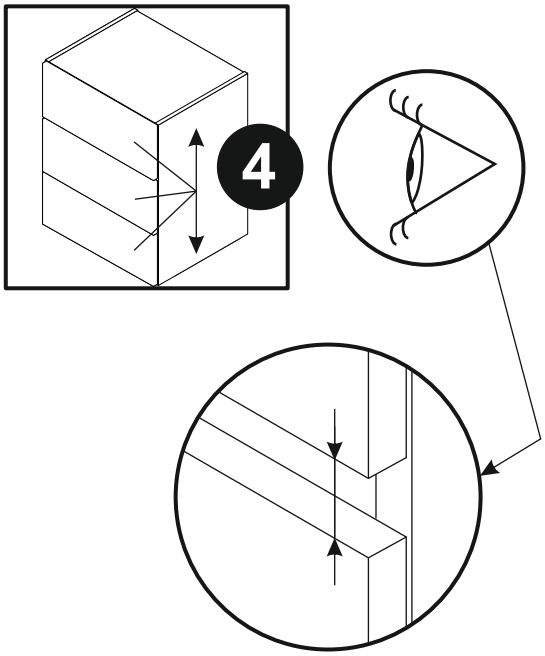
4

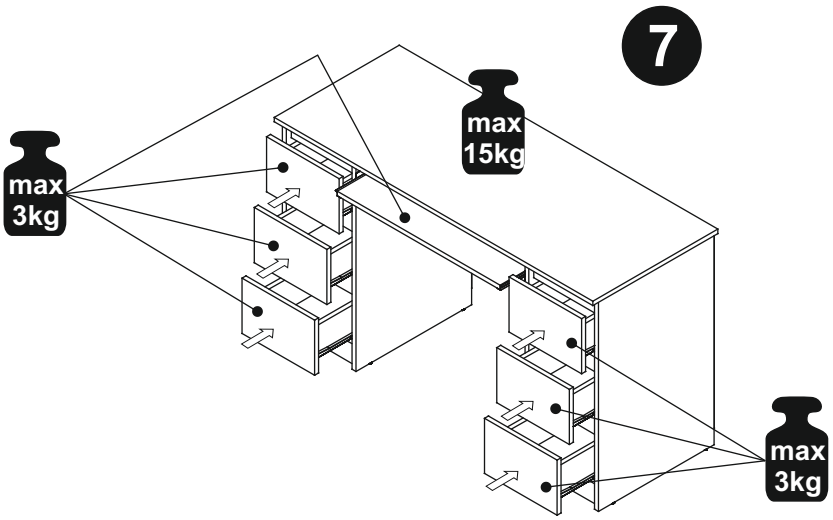
7
max
15kg
max
3kg
max
3kg