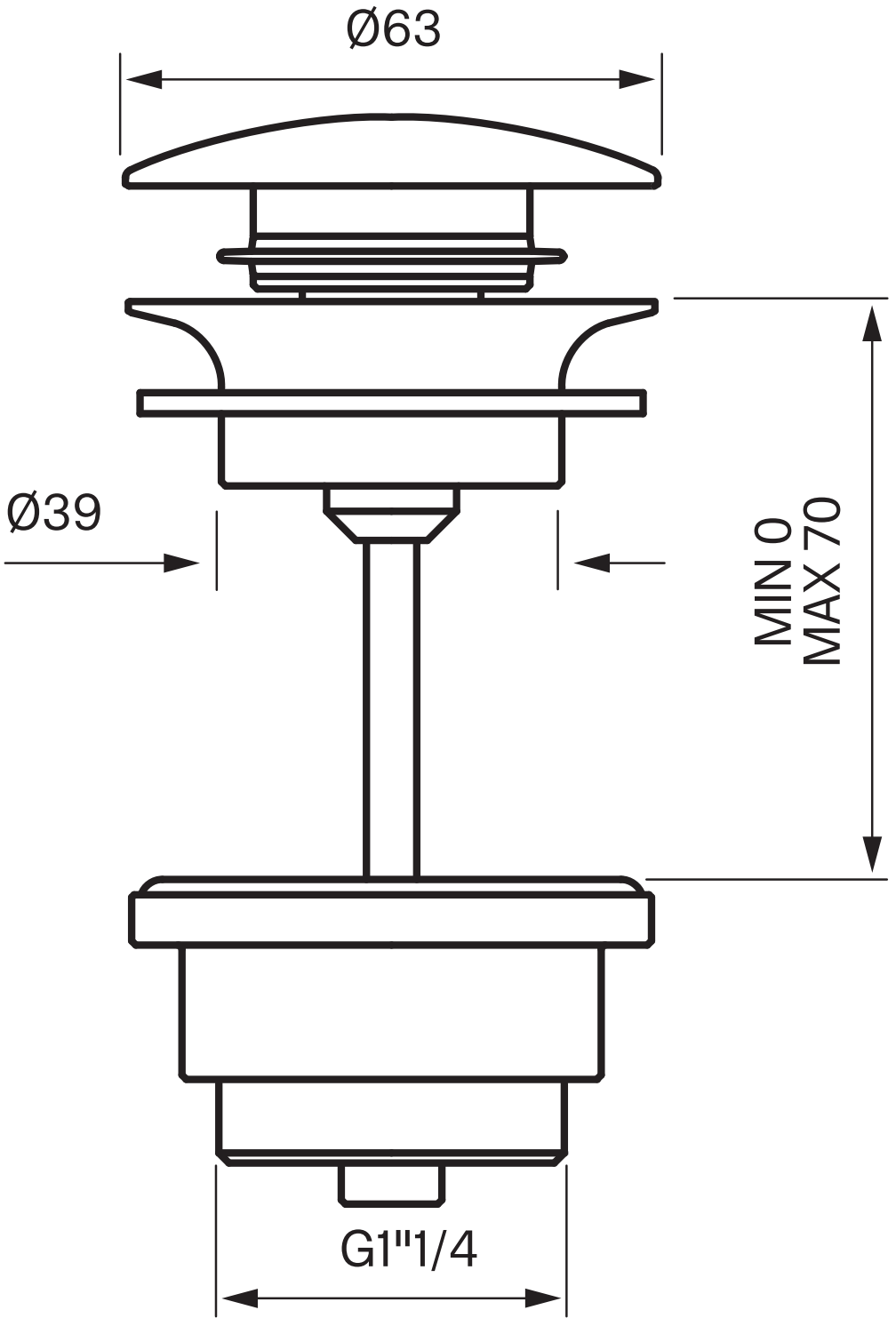
Ø63
Ø39
MIN 0
MAX 70
G1"1/4