DAISY 6m²
WOODEN SHEDS

Art Art 101 001

6 packs

TENE

tene_gardenhouses

Tene Kaubandus aiamajad

www.tene.ee

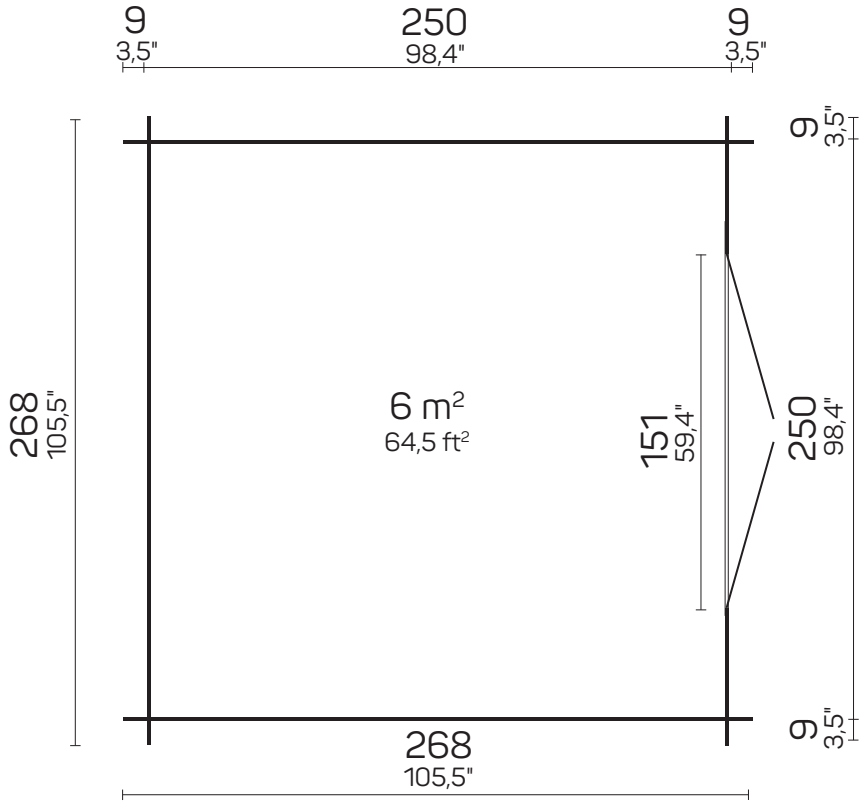

268×268 cm	105,5×105,5"
250×250 cm	98,4×98,4"
40 mm	1 5/8"
179 cm	70,4"
252 cm	99,2"
6,25 m²	66,8 ft²
15 m²	160,5 ft²
12,3 m³	434,1 ft³
23°	23°
36 cm	14,1"
18 mm	0,7"
without floor or	32 mm / 1,2"
1510×1650 mm	59,4×64,9"

without floor	335×115×60 cm	ca. 600 kg
with floor	335×115×65 cm	ca. 780 kg
	131,8"×45,2"×23,6"	ca. 1322 lb
	131,8"×45,2"×25,5"	ca. 1719 lb

Tene Kaubandus OÜ / Lihula mnt 22B, 90510 Haapsalu, Estonia / +372 47 22000 / info@tene.ee