SANNA
PREMIUM

Art 111 963

3 roll | 12 packs

Double Glazed
ISO-Verglasung
Lämpölasit
Isolerglas

TENE

tene_gardenhouses

Tene Kaubandus aiamajad

www.tene.ee

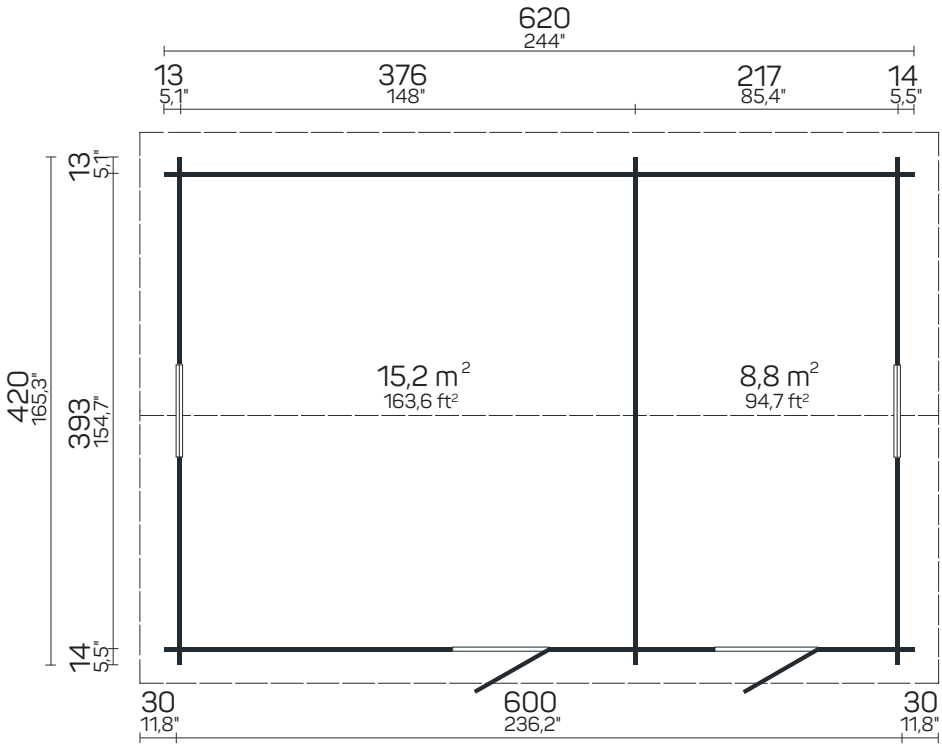

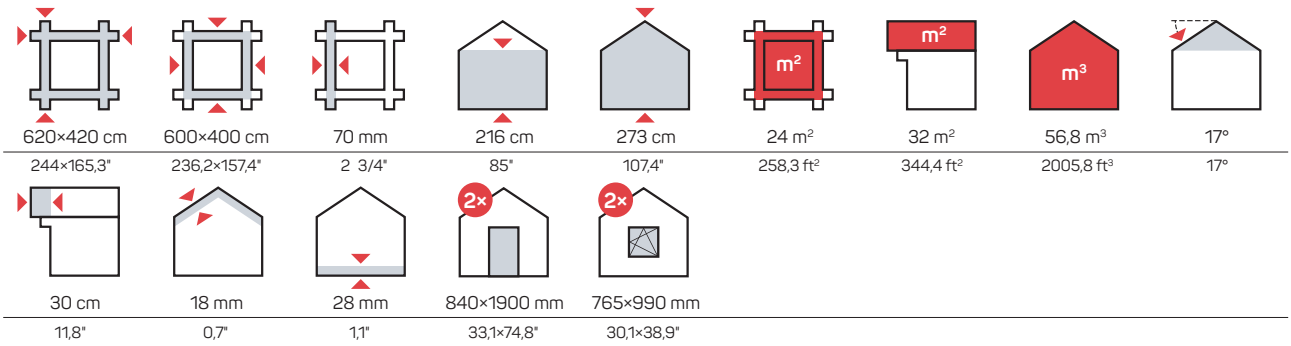

620×420 cm	600×400 cm	70 mm	216 cm	273 cm	24 m²	32 m²	56,8 m³	17°
244×165,3"	236,2×157,4"	2 3/4"	85"	107,4"	258,3 ft²	344,4 ft²	2005,8 ft³	17°

30 cm	18 mm	28 mm	840×1900 mm	765×990 mm
11,8"	0,7"	1,1"	33,1×74,8"	30,1×38,9"

Tene Kaubandus OÜ / Lihula mnt 22B, 90510 Haapsalu, Estonia / +372 47 22000 / info@tene.ee