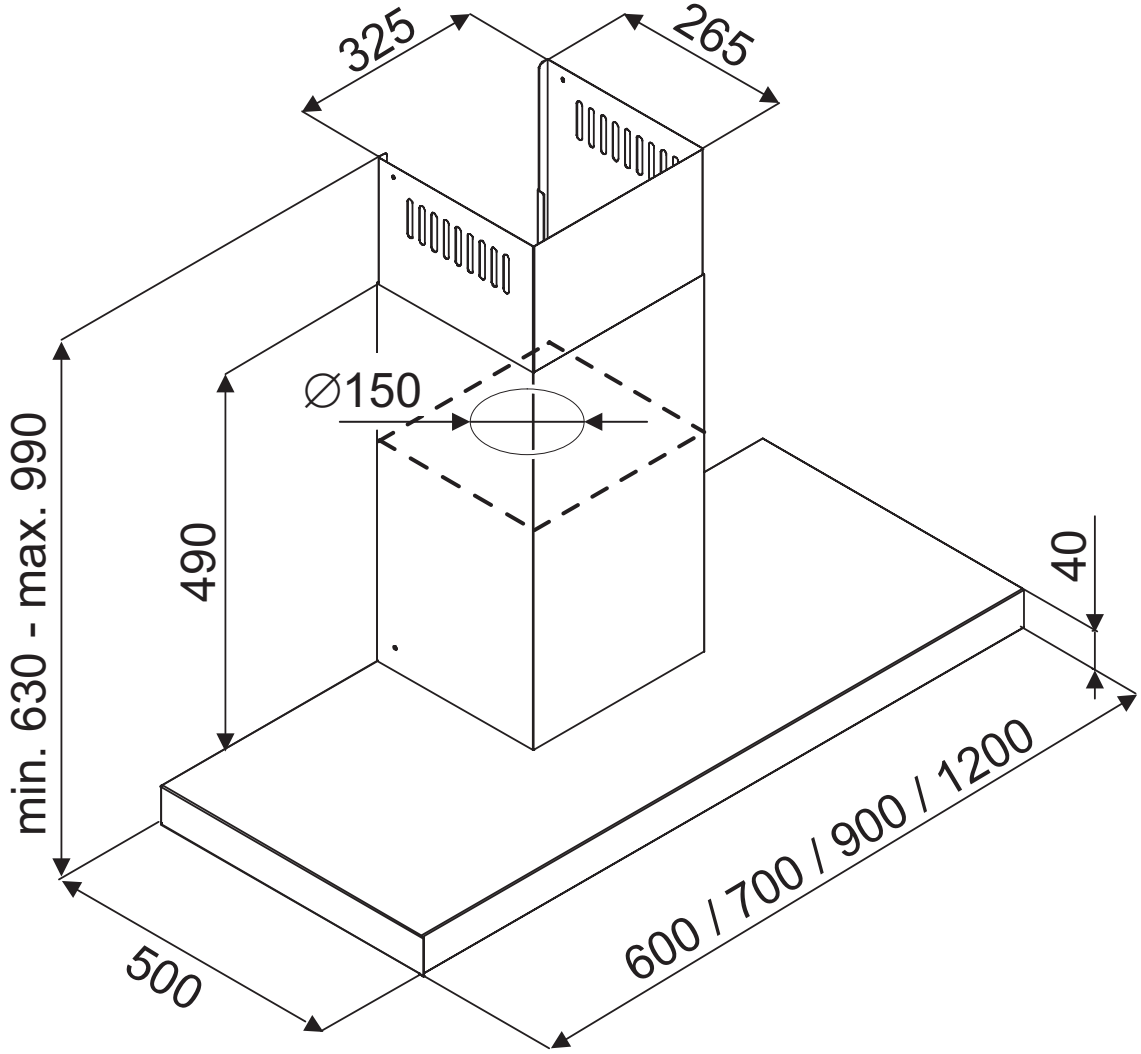Harwich wall