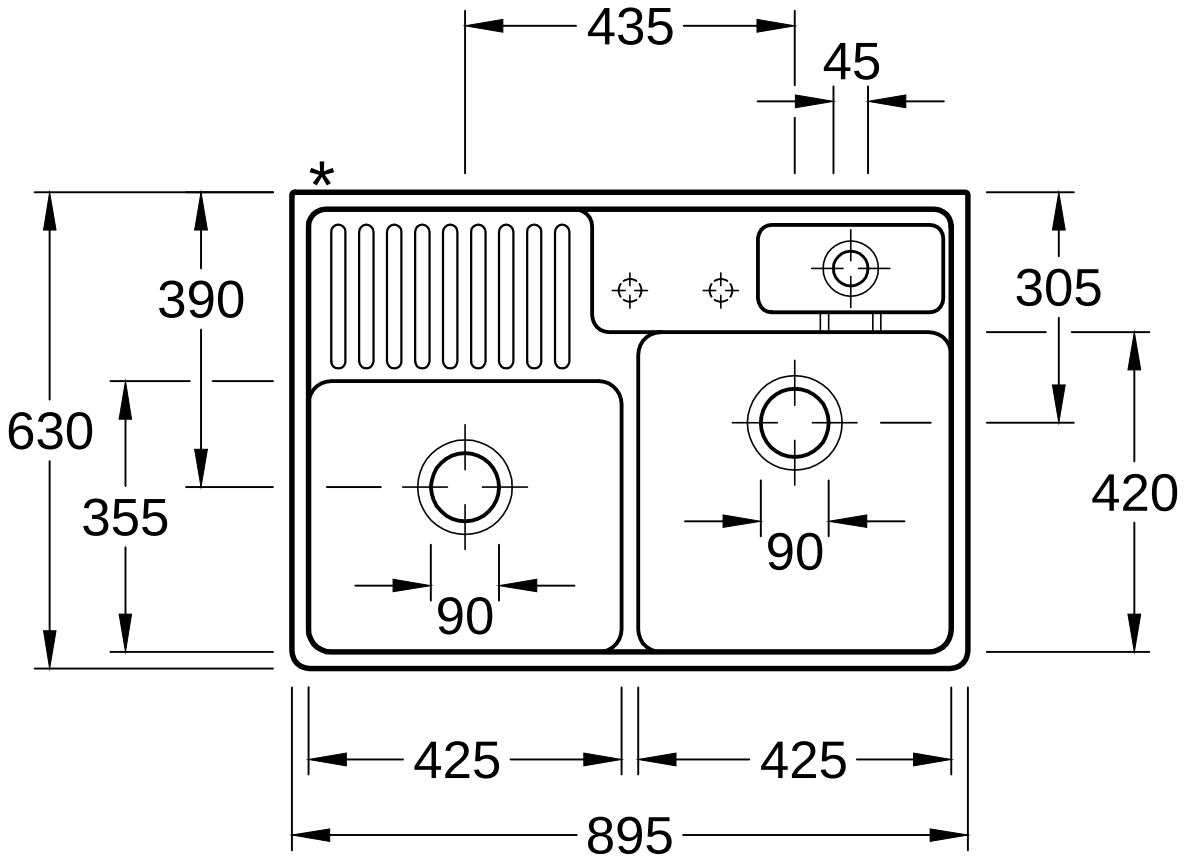

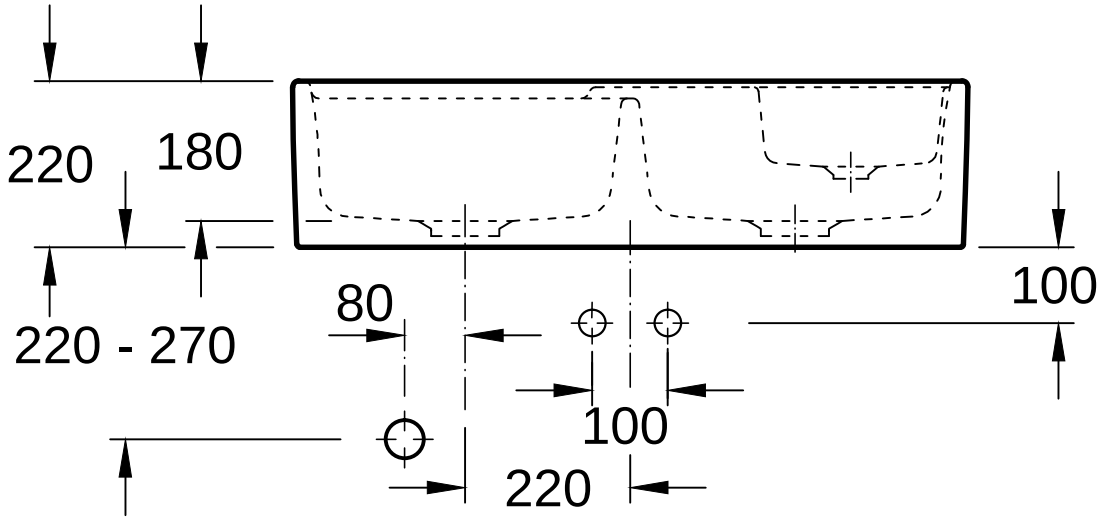

Designation			
6323 91 / 92 - Traditional sink, double bowl			Villeroy&Boch
Altered:	10. 2011	Scale: 1 : 10	This drawing may not be copied or passed on to third parties or competitive companies without our permission. Villeroy & Boch accepts no liability whatsoever for these data and technical drawings. Other parties use them at their own risk. The dimensions indicated are not binding. Villeroy & Boch reserves the right to make product changes.
		Signed: R. Halberstadt	
		Date: 09. 1999	